CONTRACT DOCUMENTS &

TECHNICAL SPECIFICATIONS

PWC2526023

WATER MAIN REPLACEMENT AND REHABILITATION

ISSUED FOR BID

September 11, 2025

Fayetteville Public Works Commission
Administrative Building
955 Old Wilmington Road
Fayetteville, NC 28301

TABLE OF CONTENTS

SECTION A – PROJECT SPECIFICS
General
Advertisement for Bids
00100 – Instructions to Bidders
Bid Submittal Documents
Bid Schedule – Performance and Delivery
Bid Checklist
00300 – Bid Pricing Form
Contractor Qualification Forms
Bid Supplemental Forms and Attachments
Minority, Women, Disadvantaged Business Enterprise (MWDBE) Program
MWDBE Program Forms
SLS/MWDBE Disclosure Form

SECTION B – CONTRACT EXECUTION DOCUMENTS
Notice of Award
Acceptance of Award
On-Call Construction Agreement
PWC General Conditions
Contract Supplemental Forms and Attachments
Notice to Proceed

SECTION C – ADMINISTRATIVE PROVISIONS
DIVISION 1 – GENERAL REQUIREMENTS
01000 – Supplementary Conditions
01025 – Measurement and Payment
01300 – Submittals
01310 – Construction Schedule
01400 – Quality Control
01700 – Project Closeout

SECTION D – TECHNICAL SPECIFICATIONS
DIVISION 2 – SITE WORK
02222 - Excavation and Backfilling for Utility Systems *rev 1.1.16*
02272 - Erosion Control - General Provisions
02273 - Temporary Silt Fence
02274 - Gravel Construction Entrance/Exit
02275 - Block and Gravel Inlet Protection *rev 7.1.10*
02500 - Traffic Control
02573 - Permanent Pavement Patch *rev 1.1.17*
02660 - Water Distribution *rev 12.10.19*
02680 - Epoxy Lining
02760 - TV Inspection
02831 - Chain Link Fencing
02931 - Lawns and Grasses (Sodding)
02933 - Lawns and Grasses (Seeding)
03301 - Concrete Construction (Utility)

SECTION E – STANDARD DETAIL DRAWINGS

APPENDICES

Appendix A – Sales Tax Form
Appendix B – Drawings/Maps
Appendix C – Sample Lining Records Log

SECTION A – PROJECT SPECIFICS GENERAL

*** THIS PAGE WAS INTENTIONALLY LEFT BLANK ***

ADVERTISEMENT FOR BID
FAYETTEVILLE PUBLIC WORKS COMMISSION
PWC2526023 – WATER MAIN REPLACEMENT AND REHABILITATION

Cumberland County
North Carolina

Pursuant to N.C.G.S 143-129, sealed bids are solicited and will be received at Fayetteville Public Works Commission, Administration Building, Conference Room 107, 955 Old Wilmington Road, Fayetteville, NC 28301, until **2:00 p.m., EST Tuesday, October 7, 2025**, at which time they will be publicly opened and read.

This project consists of rehabilitating/replacing existing water mains utilizing an epoxy resin lining system and/or open cut replacement. Work shall include installation of a temporary bypass system, pre-inspection of the mains to be lined, replacement of existing water services, replacement of water mains as directed by Fayetteville Public Works Commission, cleaning the existing main, installation of the liner, post-inspection of the lined mains, and all other items necessary to provide a complete job.

The foregoing description shall not be construed as a complete description of all work required. All work shall be done in accordance with PWC technical specifications and standard contract terms.

A **NON-MANDATORY** pre-bid meeting will be held at **2:00 p.m., EST Monday, September 22, 2025, Fayetteville Public Works Commission, Administration Building, Skills Lab, 955 Old Wilmington Road, Fayetteville, NC 28301 and will be offered via web conference.** All potential bidders must email Shelby Lesane, Procurement Advisor II at procurement@faypwc.com of their intent to attend, and to be added to the meeting ID: 233 374 835 694 0#. Potential bidders will have the ability to join the virtual meeting via phone at: (910) 302-6113 with Phone Conference ID 957 598 774# and/or via Microsoft Teams. It is encouraged to utilize Microsoft Teams as this pre-bid meeting may contain a presentation of plans and an agenda. Should you need assistance accessing Microsoft Teams via web, smart phone, or tablet, please contact Insert Advisor Name via email at the email address listed above.

Questions will be fielded at the pre-bid meeting and all prospective bidders are required to attend the meeting. Individual telephone inquiries are prohibited. PWC assumes no responsibility to fully inform absentees of clarifications not issued by addendum.

Bids must be enclosed in a sealed envelope addressed to Shelby Lesane, Procurement Advisor II, Fayetteville Public Works Commission, 955 Old Wilmington Road, Fayetteville, North Carolina 28301. The outside of the envelope must be marked **SEALED BID: WATER MAIN REPLACEMENT AND REHABILITATION** and shall indicate the name, address and state license number of the bidder. Bids shall be submitted on the printed forms, or exact copies thereof, contained in the Contract Documents.

Each bid shall be accompanied by a bid bond of five percent (5%) of the bid executed by a surety company licensed under the laws of North Carolina to execute the Contract in accordance with the bid bond and upon failure to forthwith make payment, the surety shall pay the obligee an amount equal to the amount of said bond. Said deposit shall be retained by the Owner as

liquidated damages in event of failure of the successful bidder to execute the Contract within ten (10) days after the Notice of Award or give satisfactory surety as required by law.

Performance and Payment Bonds are required in the amount of 100% of the Contract amount and shall be furnished by the Contractor. All Contractors are notified that North Carolina Statutory provisions as to licensing of Contractors will be followed as applicable in receiving and evaluating bids and in reading and awarding the Contract (Chapter 87 of the North Carolina General Statutes).

The license classification shall be:

Part 1:	Public Utilities (Water and Sewer)	-	Unlimited
	Unclassified	-	Unlimited

Plans and Specifications including Contract Documents will be available online for viewing and downloading on or about **Thursday, September 11, 2025,** on the PWC Procurement website at https://www.faypwc.com/purchasing. In addition, the documents will be available from the Fayetteville State University Construction Resource Office (FSU CRO) at https://www.uncfsu.edu/academics/colleges-schools-and-departments/broadwell-college-of-business-and-economics/outreach-centers/construction-resource-office. In collaboration with the North Carolina Institute of Minority Economic Development, the FSU CRO offers services and support to help small, minority, veteran, and women-owned businesses identify and compete for construction-related projects.

At the FSU CRO, potential bidders may:

- Research, view and print project drawings to scale free of charge;
- Use available software to prepare their bid; and
- Receive certification and pre-qualification assistance.

Please email the FSU CRO to make an appointment: fsucro@uncfsu.edu

Plans and Specifications are also being furnished to ISQFT (www.isqft.com) for online posting. Purchase of the documents is not required to bid.

Fayetteville Public Works Commission reserves the right to reject any or all bids for any reason determined by PWC to be in its best interest, or to award the bid to the lowest responsible bidder or bidders, taking into consideration quality, performance, and the time specified in the bids for the performance of the contract.

The bidder to whom the contract may be awarded must comply fully with the requirements of North Carolina General Statutes Section 143-129, as amended.

No bids may be withdrawn after the scheduled Bid Opening for a period of ninety (90) calendar days.

FAYETTEVILLE PUBLIC WORKS COMMISSION
Nikole Bohannon
Procurement Manager

00100 - INSTRUCTIONS TO BIDDERS
FAYETTEVILLE PUBLIC WORKS COMMISSION
PWC2526023 – WATER MAIN REPLACEMENT AND REHABILITATION

A. DEFINED TERMS

Terms used in these Instructions to Bidders are defined in the Definitions and Terminology sections of PWC General Conditions.

B. COPIES OF BIDDING DOCUMENTS

1. Complete sets of the Bidding Documents as stated in the Invitation to Bidders, may be obtained from the PWC Procurement Department.
2. Complete sets of Bidding Documents shall be used in preparing Bids. PWC assumes no responsibility for errors or misinterpretations resulting from the use of incomplete sets of Bidding Documents.

EXAMINATION OF CONTRACT DOCUMENTS, OTHER RELATED DATA, AND PROJECT SITE

3. Before submitting a Bid, each Bidder shall (a) examine the Contract Documents thoroughly, (b) visit the site and become familiar with the site and any local conditions that may in any manner affect the cost, progress, or performance of the Work, (c) be familiar with federal, state and local laws, ordinances, rules and regulations that may in any manner affect cost, progress or performance of the Work, and (d) study and carefully correlate Bidder's observations with the Contract Documents, and (e) give the PWC Procurement Advisor written notice of all conflicts, errors ordiscrepancies in the Contract Documents.
4. Bidders should consult the Specifications for the identification of those reports of investigations and tests of subsurface and latent physical conditions at the site or reports that otherwise may affect cost, progress, or performance of the Work which may have been utilized in the preparation of the Drawings and Specifications. PWC will make copies of such reports if available at the cost (non-refundable) of reproduction to any Bidder requesting them. These reports are not intended to constitute any explicit or implicit representation as to the nature of the subsurface and latent physical conditions, which may be encountered at the site or to constitute explicit or implicit representations as to any other matter, contained in any report. Such reports are not guaranteed as to accuracy or completeness and are not part of the Contract Documents. Before submitting a Bid, each Bidder will, at its own expense, make such investigations and tests as the Bidder may deem necessary to determine his Bid for the performance of the Work in accordance with the Contract Documents.
5. On request (minimum 48 hours advance notice), PWC will provide each Bidder access to the site to conduct such investigations and tests, as each Bidder deems necessary for submission of its Bid.
6. The lands upon which the Work is to be performed, right-of-way for access thereto, and other lands available for use by the Contractor in performing the Work are identified in the Contract Documents.

7. The submission of a Bid constitutes an incontrovertible representation by the Bidder that it has complied with every requirement of this Section and that the Contract Documents are sufficient in scope and detail to indicate and convey an understanding of all terms and conditions for the performanceof the Work.

C. INTERPRETATIONS AND ADDENDA

1. All questions about the meaning or intent of the bid or Contract Documents shall be submitted in writing to Shelby Lesane, Procurement Advisor II, by email to procurement@faypwc.com. In order to receive consideration, questions must be received by Friday, September 26, 2025, 4:00 p.m. Any interpretations of questions so raised, which in the opinion of the Project Engineer require interpretations, will be issued by Addenda via email or posted online by the Owner and/or Project Engineer. An Addendum extending the Bid Opening date may be issued up to five (5) business days before the Bid Opening date. An Addendum withdrawing the Invitation for Bid may be issued any time prior to the Bid Opening date. The Owner and Project Engineer will not be responsible for oral interpretations or clarifications, which anyone presumes to make on their behalf.

Bidders are expressly prohibited from contacting any PWC official or employee associated with this project, except as noted above. Violation of this prohibition is grounds for the immediate disqualification of the bidder.

2. PWC may issue such additional Addenda as may be necessary to clarify, correct, or change the Contract Documents. Such Addenda, if any, will be issued in the manner and within the time stated in Paragraph 1 of this Section.

3. Each Bidder shall be responsible for determining that all Addenda issued by PWC have been received before submitting a Bid for the Work.

4. Each Bidder shall acknowledge the receipt of each Addendum on the Bid Form.

D. VENDOR REGISTRATION VIA ISUPPLIER

1. All vendors interested in doing business with PWC must register as a vendor through the iSupplier Portal using the link below. The iSupplier self-service portal enables vendors to have real-time access to information regarding purchase orders, invoices, and payments through a secure environment. Attach a copy of your W9 to your online registration.

   https://www.faypwc.com/isupplier-doing-business-with-pwc/

E. QUALIFICATION OF CONTRACTORS

1. **Bidder Qualification Form** – The Bid package shall include the completed Contractor Qualification Form and all supporting documentation.

2. **Statutory Requirements** – The Bidder shall comply with all federal, state, and local statutes, regulations, and codes as they relate to the Project. Failure to comply with these requirements shall be considered a breach of Contract.

3. Contractor to provide utility references for similar projects completed by identified crews.

F. SUBSTITUTE MATERIAL AND EQUIPMENT

The Contract, if awarded, will be on the basis of material and equipment described in the Drawings orrequired in the Specifications without consideration of possible substitute or "or-equal" items. The procedure for submittal of substitute or “or-equal” items for consideration is set forth in the PWC General Conditions.

G. CONTRACTOR'S LICENSE

1. No General Contractor shall engage in contracting work in the State of North Carolina unless it has been licensed under in accordance with North Carolina law.
2. Bidders are prohibited from contracting for, or bidding upon, the construction, removal, repair or improvements to or upon real property owned, controlled or leased by Fayetteville Public Works Commission without a North Carolina Contractor's License.
3. Each bidder shall indicate its North Carolina Contractor's License number on the bid envelope and the Bid Form.
4. License Classification shall be:
   - Public Utilities Water and Sewer: Unlimited
   - Unclassified: Unlimited

H. SUBCONTRACTORS

1. Contractor shall subcontract no more than 49 percent (49%) of the value of the Contract.
2. Each Bidder shall submit to PWC with its bid the List of Subcontractors, Suppliers, other persons, and organizations proposed for those portions of the Work for which such identification is required. If PWC, after due investigation has reasonable objection to any proposed Subcontractor, Supplier, other person or organization, PWC may, before Notice of Award is given, request apparent Successful Bidder to submit an acceptable substitute without an increase in the Bid.
3. If the apparent Successful Bidder declines to make such a substitution, PWC may award the Contract to the next lowest responsive, responsible Bidder that proposes to use acceptable Subcontractors, Suppliers, and other persons, and organizations. The declining to make requested substitutions will not constitute grounds for sacrificing the bid security of any Bidder. If PWC does not make written objection to a Bidder’s list of Subcontractors, Suppliers, other persons, or organizations prior to giving Notice of Award, the list will be considered acceptable, subject to revocation as provided in the PWC General Conditions.

I. MINORITY, WOMEN, DISADVANTAGED BUSINESS ENTERPRISE (MWDBE) PROGRAM / SMALL LOCAL SUPPLIER (SLS) PROGRAM

1. PWC is committed to promoting the utilization of Minority, Women, and Disadvantaged Businesses in PWC’s geographical statistical area (GSA) by providing equal opportunity for participating in all aspects of PWC’s contracting and procurement programs. The GSA consists of NCDOT division areas 3-8, and 10. PWC is also committed to promoting the utilization of small, local businesses in the Fayetteville Metropolitan Statistical Area (MSA) by increasing opportunities for those businesses to participate in PWC procurements. The

MSA consists of Cumberland County, Hoke County, and Harnett County.

2. Bidders must report their efforts to engage MWDBEs, Historically Underutilized Businesses (HUBs), and Small Local Suppliers for each project, regardless of specific project requirements.

3. **Bidders shall submit the MWDBE Affidavits A or B, & E provided within Attachment A with their bid submittal. The Affidavits shall be signed and notarized**

4. In accordance with PWC's MWDBE Program, the goal shall be to award four percent (**14%**) of the total contract dollars to MBE firms and four percent (**11%**) to WBE firms. A complete copy of PWC's MWDBE Program is available for inspection at PWC Procurement Department.

5. Bidders are encouraged to document good faith efforts and subcontractor utilization in the **MWDBE Affidavits C or D** at the time of bid submission, though it is not mandatory. If these efforts are not included, PWC's Program staff will contact the lowest responsive bidder to request documentation, which must be provided within 24 hours or by the next business day. Bidders shall submit, with their bid, the MWDBE documentation required in the Contract Documents. The Bidder is strongly recommended to attend the Pre-Bid Meeting, as important information will be reviewed.

6. NCDOT Disadvantaged Business Enterprise (DBE) and NC Department of Administration (DOA) Historically Underutilized Business (HUB) firms with current certifications are acceptable for listing in the bidder's submittal of MWDBE participation and will be considered to meet any necessary contract goal. Firms that are certified through NCDOT are listed in the "Vendor Directory" which can be accessed through the following: https://www.ebs.nc.gov/VendorDirectory/default.html. Firms that are certified through NC DOA are listed at the "Vendor Search" which can be accessed through the following link: https://evp.nc.gov/vendors/vendorsearchadvanceform/?id=d98aa5d6-0d57-ee11-be6e-001dd804e775 .

7. The Bidder is strongly recommended to attend the Pre-Bid Meeting, as important information will be reviewed.

J. SUBMISSION OF BIDS

1. All Bidders shall use the enclosed Bid Forms, or exact copies thereof, in submitting their bid prices. Failure to provide full and complete Bid Forms using the form provided herein will result in a bid being deemed non-responsive.

2. PWC will not accept modified Bid Forms, oral Bids, or Bids received by telephone, email, or telecopier (FAX machine) for this Bid.

3. All prices must be F.O.B. delivered to the point as indicated by this Bid. PWC will grant no allowance for boxing, crating, or delivery unless specifically provided for in this Bid.

4. The Bid Form must be completed in black ink. Black or blue pen ink is acceptable if handwritten. Discrepancies between amounts shown in words and amounts shown in figures will be resolved in favor of the amounts shown in words. Discrepancies in the

multiplication of units of Work and the unit prices will be resolved in favor of the correct multiplication of the unit prices. Discrepancies between the indicated sum of any column of figures and the correct sum thereof will be resolved in favor of the correct sum.

5. Bid submittals sent by mail should be registered mail. The sealed Bid, marked as indicated above, should be enclosed in an additional sealed envelope similarly marked and addressed to:

   Fayetteville Public Works Commission
   Attn: Shelby Lesane, Procurement Advisor II
   955 Old Wilmington Road
   Fayetteville, North Carolina 28301

6. Mark the envelope in the lower left-hand corner with the project title, hour and due date of Bid, and the Bidder's North Carolina contractor registration number.

7. Bids sent by mail and arriving after the time for the opening of Bids shall not be considered valid Bids. In such instances, the Bidders shall have no claim against PWC.

8. All items contained in the Bid Checklist shall be completely filled out and submitted with the bid. Failure to submit any of the items requested with the Bid Form may be just cause for rejection of the Bid by PWC.

9. All erasures, insertions, additions, and other changes made by the Bidder to the Bid Form shall be signed or initialed by the Bidder. Bids containing any conditions, omissions, erasures, alterations, or items not called for in the Bid, may be rejected by PWC as being incomplete or nonresponsive.

10. The Bid Form must be signed in order to be considered. If the Bidder is a corporation, the Bid must be submitted in the name of the corporation, not simply the corporation's trade name. In addition, the Bidder must indicate the corporate title of the individual signing the Bid.

11. The Bid Form, the Bid security, if any, and any other documents required, shall be enclosed in a sealed opaque envelope. Any notation or notations on the exterior of the envelope purporting to alter, amend, modify, or revise the bid contained within the envelope shall be of no effect and shall be disregarded.

12. All Bids received in the Procurement Department by the deadline indicated will be kept sealed until the time and date of the Bid Opening.

13. All late Bids shall be returned unopened to the sender.

K. BID BOND

1. Each Bid shall be accompanied by an acceptable Bid bond in the amount of five percent (5%) of the Bid amount, and made payable to Fayetteville Public Works Commission, North Carolina.

2. The Bid bond is a guarantee that if the contract is awarded by PWC to the Bidder, the Bidder shall enter into the contract with PWC for the work mentioned in this Bid or forfeit

the Bid bond to PWC, not as a penalty, but as liquidated damages.

3. No forfeiture under a Bid bond shall exceed the lesser of (a) the difference between the Bid forwhich the Bid bond was written and the next low Bid of another Bidder, or (b) the face amount of the Bid bond.
4. All bonds shall be executed by a surety company selected by the Bidder, which is legally authorized to do business in the State of North Carolina (NCGS §44 A-26), and the bond shall be the same in both form as well as substance as AIA Document A310, Bid Bond.
5. The Bidder shall require the attorney-in-fact, who executed the required bond on behalf of the surety company, to affix thereto a certified and current copy of the power of attorney.
6. The bond premium shall be paid by the Bidder and the cost shall be included in the Bid price.
7. Any inspection of procurement transaction records shall be subject to reasonable restrictions to ensure the security and integrity of the records.

L. OPENING OF BIDS

1. Bids will be opened publicly and read aloud on the date and time set for the Bid Opening in the Notice to Bidders.
2. Any Bidder, upon request, shall be afforded the opportunity to inspect Bid records within a reasonable time after the opening of all Bids but prior to award, except in the event that PWC decides not to accept any of the Bids and to reopen the contract. Otherwise, bid records shall be open to public inspection only after the award of the Contract.
3. Any inspection of procurement transaction records shall be subject to reasonable restrictions to ensure the security and integrity of the records.

M. MODIFICATION OF BIDS

1. A Bid may be modified or withdrawn by the Bidder at any time prior to the time and date set for the Bid Opening. The Bidder shall notify the PWC Procurement Department in writing of its intentions.
2. Modified and withdrawn Bids may be resubmitted to the PWC Procurement Department up to the time and date set for the Bid Opening.

N. WITHDRAWAL OF BID DUE TO ERROR

1. If the Bidder desires to withdraw its Bid, the Bidder must do so before the time fixed for the opening, without prejudice, by communicating its purpose in writing to PWC. After bids are open, bids may only be withdrawn in strict accordance with N.C.G.S. Section

   143-129-1.

O. BIDS TO REMAIN OPEN

1. All Bids shall remain open for ninety (90) calendar days after the day of the Bid Opening.

P. ESTIMATED QUANTITIES

1. The estimated quantities contained herein in certain items in the Bid are for the purpose

of comparing bids, and while they are believed to be close approximations, they are not guaranteed, and settlement will be made on the basis of the work as actually executed at the unit prices in the Bid as accepted. PWC further reserves the right to delete any single line item or combination of items from the bid and cannot guarantee that all quantities listed in the Contract Documents will be utilized.

2. The Contractor should verify quantities before submitting a bid. Due to conditions that may be found under pavement such as the accurate location of existing water lines, sewer lines, gas lines, and structure services of all types, quantities are subject to change during construction, but this contingency shall not be used for a claim to change unit prices submitted in the Bid.

Q. AWARD OF CONTRACT

1. PWC reserves the right to reject any and all Bids, to waive any and all informalities, and to disregard all nonconforming, nonresponsive, or conditional Bids. PWC reserves the right to request additional information from any or all bidders for evaluation purposes. Failure or refusal to furnish additional information as requested may result in the rejection of the bid.
2. In case of a tie Bid, the tie shall be decided by lot.
3. It is the intent of PWC to recommend the award of this contract to the lowest responsive, responsible Bidder provided the Bid has been submitted in accordance with the requirements of the Bidding Documents and does not exceed the funds available. In determining the lowest responsible Bidder, PWC may consider, among other criteria, the Bidder's past performance conduct on other contracts, and other information provided by the Bidder as noted below.
4. In determining the lowest responsive Bidder, PWC will evaluate the Bidder’s proposed Bid price and the completeness of the submitted bid in accordance with the requirements of the Contract Documents.
5. PWC may consider the operating costs, maintenance considerations, performance date, and guarantees of materials and equipment.
6. PWC may conduct such investigations as deemed necessary to assist in the evaluation of any Bid and to establish the responsibility, qualifications and financial ability of the Bidders, as well as other considerations, to include but not limited to resources available to the Bidder to perform the work effectively, proposed Subcontractors and other persons and organizations to do the workin accordance with the Contract Documents to PWC’s satisfaction within the prescribed time.
7. PWC reserves the right to reject the Bid of any Bidder who does not pass any such evaluation to PWC’s satisfaction.
8. If the Contract is to be awarded, PWC will give the Successful Bidder a Notice of Award within ninety (90) days after the day of the Bid Opening.
9. The Bidder to whom the contract is awarded shall, within ten (10) days after prescribed documents are presented for signature, execute and deliver the Contract Documents and

any otherforms or bonds required by the Bid to PWC.

10. The Bidder is required to complete the attached forms that will allow PWC to verify that the Bidder is qualified to perform the Work described in these Contract Documents. All forms shall be completed and submitted with the Bid. Failure to submit all the required forms shall be considered grounds for PWC to reject the bid.

    PWC will review all of the bids and qualification data to determine the lowest responsive, responsible Bidder. PWC reserves the right to not award the Contract to the lowest bidder if the information provided is not complete, does not meet the satisfaction of PWC, or has been falsified. PWC will not request any additional information in order to allow the Contractor to complete bid.

11. During the evaluation phase, bid submittals will be reviewed to ascertain which bids technically and otherwise address all the requirements of these Contract Documents. Bid submittals determined to be technically non-responsive or not sufficiently responsive may be disqualified.

    The Bidder shall address each of the Evaluation Criteria as requested in the Technical Evaluation Criteria Form located within Section A Project Specifics Bid Submittal Documents. To be considered substantive, the information must respond to all requirements.

12. PWC may conduct such investigations/verifications as deemed necessary to establish the responsibility, qualification and financial ability of the Bidder. Should PWC find that the apparent low bidder is not the lowest responsive, responsible bidder by integrity of the information furnished, said apparent low bidder will be so notified and its bid bond shall be returned without prejudice. Failure or refusal to furnish any items of information requested by PWC shall be considered as non-responsive and therefore basis for rejection of the bid.

R. TRANSITION ASSISTANCE

1. If a PWC Construction Agreement results from this solicitation, and said Agreement is not renewed at the end of the then current term or is terminated prior to its expiration for any reason, at the option of PWC, Bidder shall provide transition assistance to PWC for up to six (6) months following termination or expiration of the Agreement to allow for the Services to continue without interruption or adverse effect, and to facilitate the orderly transfer of such Services to PWC or its designees. If PWC exercises this option, the Parties agree that such transition assistance shall be governed by the terms and conditions of the Agreement (notwithstanding this expiration or cancellation), except for those Agreement terms or conditions that do not reasonably apply to such transition assistance. PWC shall agree to pay the Bidder for any resources utilized in performing such transition assistance at the most current rates provided by the Bidder for performance of the Services or other resources utilized. Upon request of PWC, Bidder agrees to deliver an amendment to the Agreement in form and substance reasonably acceptable to the parties memorializing the extension of the term as contemplated above.

S. TAXES

1. The Successful Bidder shall pay all county, city, state and federal taxes required by laws in effect at the time Bids are received and resulting from the Work or traceable thereto, under whatever name levied.
2. Said taxes shall not be in addition to the contract price between PWC and the Successful Bidder. The taxes shall be an obligation of the Successful Bidder and not of PWC. PWC shall be held harmless from same by the Successful Bidder.

T. PERFORMANCE AND OTHER BONDS

1. The PWC General Conditions set forth PWC's requirements as to Performance and other Bonds.

U. E-VERIFY REQUIREMENTS

1. Contractor hereby acknowledges that "E-Verify" is the federal E-Verify program operated by the US Department of Homeland Security and other federal agencies which is used to verify the work authorization of newly hired employees pursuant to federal law and in accordance with Article 2, Chapter 64 of the North Carolina General Statutes.
2. Contractor further acknowledges that all employers, as defined by Article 2, Chapter 64 of the North Carolina General Statutes, must use E-Verify and after hiring an employee to work in the United States, shall verify the work authorization of the employee through E-Verify in accordance with NCGS §64-26(a).
3. Contractor hereby pledges, attests and warrants through execution of this Agreement that Contractor complies with the requirements of Article 2, Chapter 64 of the North Carolina General Statutes and further pledges, attests and warrants that any subcontractors currently employed by or subsequently hired by Contractor shall comply with any and all E-Verify requirements. Failure to comply with the above requirements shall be considered a breach of this Agreement.

V. IRAN DIVESTMENT ACT

1. As mandated by N.C.G.S. 147-86.59(a), the Contractor hereby certifies that it is not listed on the Final Divestment List created by the North Carolina State Treasurer pursuant to N.C.G.S. 147-86.58. Contractor further certifies that in accordance with N.C.G.S. 146-86.58(b) that it shall not utilize any subcontractor found on the State Treasurer's Final Divestment List. Contractor certifies that the signatory to this Purchase Order authorized by the Contractor to make the foregoing statement.

W. UNIT PRICING

1. All unit prices submitted herein shall be firm against any increase for the initial one-year contract period.

2. If the contract is renewed for an additional contract period, the Contractor may request that each unit price be increased/decreased, based on the most recently published Engineering News Record Construction Cost Index for the annual change, not to exceed 3.00% whichever is lower. PWC shall receive the Contractors request for a unit price adjustment no later than 15 days prior to the end of the contract year. Failure to submit the request by this time will result in the contract being renewed at the same unit prices.

3. The request for increase may be submitted with the PWC reservice the right to accept or reject the increase or cancel the Contract. Such action by PWC shall occur no later than 15 business days after receipt of a properly documented request for price increase. Any increases accepted by PWC shall become effective the month following approval and be valid for a minimum of one contract year.

*** END OF SECTION ***

SECTION A – PROJECT SPECIFICS
BID SUBMITTAL DOCUMENTS

BID SCHEDULE – PERFORMANCE AND DELIVERY
FAYETTEVILLE PUBLIC WORKS COMMISSION
PWC2526023 - WATER MAIN REPLACEMENT AND REHABILITATION

Virtual/In Person Pre-Bid Meeting: **(NON-MANDATORY)**	2:00 p.m., Monday, September 22, 2025 Fayetteville Public Works Commission Administrative Building Skills Lab 955 Old Wilmington Road Fayetteville, NC 28301
Deadline for Questions from Bidders[1]	4:00 p.m., Friday, September 26, 2025
Deadline for Addenda issued by PWC Procurement Department and Project Engineer[2]	4:00 p.m., Tuesday, September 30, 2025
Bid Opening (Submittal Deadline)	2:00 p.m., Tuesday, October 7, 2025 Fayetteville Public Works Commission Administrative Building Conference Room 107 955 Old Wilmington Road Fayetteville, NC 28301
Target Commission Meeting	Wednesday, October 22, 2025
Target City Council Meeting	Monday, November 10, 2025
Contract Time:	365 Days from NTP. The agreement may be extended for up to two (2) additional one (1) year periods, subject to mutual consent of both parties. The total duration of the agreement shall not exceed three (3) years.
Bid Acceptance Period	Within ninety (90) Calendar Days unless otherwise noted

---

1. Questions regarding this bid must be submitted in writing to the attention of Shelby Lesane, Procurement Advisor II, by email to procurement@faypwc.com.

   Bidders are expressly prohibited from contacting any FPWC official or employee associated with this Invitation to Bid, except as noted above. Violation of this prohibition is grounds for the immediate disqualification of the bidder.

2. Any addenda to these Contract Documents will be issued by the Project Engineer no later than the date and time stated above.

BID SUBMITTAL CHECKLIST

- ☐ 1. Enter Contractor's License Number where called for in the Bid Form and on the outside of the sealed envelope containing the Bid.
- ☐ 2. Photocopy of Contractor's License.
- ☐ 3. Bid Bond
- ☐ 4. Bid Forms Section 00300.
- ☐ 5. Provide the responsible North Carolina Registered Agent for Insurance Claims. Include contact information.
- ☐ 6. Provide the proposed responsible Bonding Company name. Include contact information.
- ☐ 7. List of proposed Subcontractors and material suppliers exceeding 5% of the Contract Value.
- ☐ 8. Non-Collusive Affidavit.
- ☐ 9. Nondiscrimination Clause.
- ☐ 10. Affidavit of Organization and Authority and Sworn Statement.
- ☐ 11. Equal Employment Opportunity Acknowledgment.
- ☐ 12. Certification regarding Debarment, Proposed Debarment, and other Responsible Matters.
- ☐ 13. FTA Certification Regarding Lobbying.
- ☐ 14. Affidavit A – Listing of Good Faith Efforts, et al.
- ☐ 15. Affidavit B – (Only if the Contractor will perform **ALL ELEMENTS OF THE WORK** on this project with their own forces **AND** will complete **ALL ELEMENTS OF THIS PROJECT WITHOUT THE USE OF SUBCONTRACTORS, MATERIAL SUPPLIERS, OR PROVIDERS OF PROFESSIONAL SERVICES**.
- 16. Affidavit E - Identification of Minority Business Participation Form.
- ☐ 17. SLS / MWDBE Disclosure Form.
- ☐ 18. The Completed Contractor Qualification Form.

FAILURE TO SUBMIT THE ABOVE FORMS WITH THE BID FORM PROVIDED HEREIN MAY BE JUST CAUSE FOR REJECTION OF THE BID BY THE OWNER

*** THIS PAGE INTENTIONALLY LEFT BLANK ***

00300 - BID FORM

TO: **Fayetteville Public Works Commission**
Attn: Shelby Lesane, Procurement Advisor II
955 Old Wilmington Road
Fayetteville, North Carolina 28301

PROJECT: **PWC2526023 – WATER MAIN REPLACEMENT AND REHABILITATION**

FROM: BIDDER _____

ADDRESS _____

_____

DATE OF BID _____ , 20 ____

A. The undersigned BIDDER proposes and agrees, if this Bid is accepted, to enter into a Contract with OWNER in the form included in the Contract Documents to perform and furnish all Work (as that term is defined in the Construction Agreement) specified or indicated in the Contract Documents for the Contract Price and within the Contract Time indicated in this Bid and in accordance with the Contract Documents.

B. BIDDER accepts all of the terms and conditions of the Instructions to Bidders, including, without limitation, those dealing with the disposition of payment and performance bonds, and insurance certificates. This bid will remain open for ninety (90) calendar days after the day of Bid opening. BIDDER will sign the Contract and submit the Contract Security and other documents required by the Contract Documents within ten (10) days after the date of receipt by the BIDDER.

C. In submitting this Bid, Bidder represents, as more fully set forth in the Contract, that:

1. BIDDER has examined copies of all the Contract Documents and of the following addenda, receipt of all which is acknowledged on the bid summary page:

2. BIDDER has examined the site and locality where the Work is to be performed, the legal requirements (federal, state, and local laws, ordinances, rules and regulations) and the conditions affecting cost, progress of performance of the work and has made such independent investigations as BIDDER deems necessary.

3. BIDDER acknowledges that OWNER does not assume responsibility for the accuracy of dimensions or completeness of information and data shown or indicated in the Bidding Documents with respect to existing facilities.

4. BIDDER has carefully studied all reports of explorations and tests of subsurface conditions at or contiguous to the site of the Work (expect underground facilities) and all drawings of physical conditions in or relating to existing surface or

subsurface structures, pipelines, and utilities at or contiguous to the site are provided within these Contract Documents. Geotechnical Reports and other information regarding subsurface conditions are identified in the attached appendices and detailed in Article V of the PWC General Conditions. BIDDER acknowledges that the OWNER does not assume responsibility for the accuracy or completeness of information and data shown or indicated in the Bidding Documents with respect to underground facilities at or contiguous to the site of Work. BIDDER had obtained and carefully studied (or assumes responsibility for have done so) all such additional or supplementary examinations investigations, explorations, tests, studies, and data that are necessary to identify and understand conditions (surface, subsurface, and underground facilities) at or contiguous to the site of Work or otherwise which may affect cost, progress, performance, or furnishing the Work or which relate to any aspect of means, methods, techniques, sequences, and procedures of construction to be employed by Bidder and safety precautions and programs incident thereto. BIDDER waives all rights to claim that any additional examinations, investigations, explorations, tests, studies, or data are necessary for the proper submission of the Bid for the performance and furnishing of the Work in accordance with the Contract Time, Contract Price, and other terms and conditions of the Contract Documents.

5. BIDDER hereby certifies that, if awarded the Contract for construction of the Project, it will take all possible actions to minimize costs to the OWNER which are related to any disruptions in any part of the Work resulting from unforeseeable conditions which may be encountered and work changes or additions which may be made.

6. BIDDER has correlated the information known to BIDDER, information and observations obtained from visits to the site, reports and drawings identified in the Contract Documents, and all additional examinations, investigations, exploration, tests, studies, and data with the Contract Documents.

7. BIDDER has given OWNER written notice of all conflicts, errors, ambiguities, or discrepancies that BIDDER has discovered in the Contract Documents and the written resolution thereof by OWNER is acceptable to BIDDER, and the Contract Documents are generally sufficient to indicate and convey understanding of all terms and conditions for performing and furnishing the Work for which this Bid is submitted.

8. By bidding in response to this invitation, the BIDDER represents that in the preparation and submission of this Bid, said BIDDER did not, either directly or indirectly, enter into any combination or arrangement with any person, firm or corporation or enter into any agreement, participate in any collusion, or otherwise take any action in the restraint of free, competitive bidding in violation of the Sherman Act (15 U.S.C. Section 1).

9. Bid form must be completed in blue or black ink or by typewriter. The Bid price of each item on the form must be stated in both words and numerals. In case of a

conflict, words shall take precedence. Discrepancies in the multiplication of units of work and unit prices will be resolved in favor of the correct multiplication of the unit prices. Discrepancies between the indicated sum of any column of figures and the correct sum thereof will be resolved in favor of the correct sum.

10. BIDDER understands that the award of contract will be made on the basis of the total Bid amount which will be determined as the sum of the unit price and lump sum Bid Items.

11. BIDDER understands that quantities are estimated and are not guaranteed; they are solely for comparing Bids and establishing the total Bid amount. The Price will be modified by Change Order, and final payment will be based on the quantities of work actually furnished and installed by the successful BIDDER.

12. BIDDER shall complete the Work for the prices indicated on the next page.

Bid Pricing Form

Company Name:

Fayetteville PWC Water Main Rehabilitation						
Item No.	Ref No.	Measurement & Payment Description	Estimated Qty	Unit	Unit Price	Cost Extension
Incidental Items						
1	1.01	Mobilization and Demobilization	1	LS		
2	1.02	Undercut Excavation	1,000	CY		
3	1.03	Borrow Excavation (Select Backfill)	500	CY		
4	1.04	Remove and Replace Concrete Curb and Gutter	200	LF		
5	1.05	Remove and Replace Asphalt Curb	50	LF		
6	1.06	Asphalt Permanent Patch 2-inch (2-inch Surface Course)	5,000	SY		
7	1.06	Asphalt Permanent Patch 4-inch (2-inch Intermediate, 2-inch Surface Course)	10,000	SY		
8	1.06	Asphalt Permanent Patch 6-inch (4-inch Intermediate, 2-inch Surface Course)	10,000	SY		
9	1.07	Sod	2,000	SY		
10	1.08	Seeding	150	SY		
Water Main Construction Items						
11	2.01	Furnish and Install New Water Main – Ductile Iron | 16-inch	500	LF		
12	2.01	Furnish and Install New Water Main – Ductile Iron | 12-inch	500	LF		
13	2.01	Furnish and Install New Water Main – Ductile Iron | 8-inch	15,000	LF		
14	2.01	Furnish and Install New Water Main – Ductile Iron | 6-inch	250	LF		
15	2.01	Furnish and Install New Water Main – PVC | 16-inch	500	LF		
16	2.01	Furnish and Install New Water Main – PVC | 12-inch	500	LF		
17	2.01	Furnish and Install New Water Main – PVC | 8-inch	1,000	LF		
18	2.01	Furnish and Install New Water Main – PVC | 6-inch	100	LF		
19	2.02	Furnish and Install New Water Main – PVC | 2-inch	1,000	LF		
20	2.03	Furnish and Install New 16-inch Gate Valve	10	EA		
21	2.03	Furnish and Install New 12-inch Gate Valve	15	EA		
22	2.03	Furnish and Install New 8-inch Gate Valve	60	EA		
23	2.03	Furnish and Install New 6-inch Gate Valve	15	EA		
24	2.04	Furnish and Install New Fire Hydrant Assembly	30	EA		
25	2.05	Remove Fire Hydrant Assembly	30	EA		
26	2.06	Grout Fill Abandoned Water Main	10,000	LF		
27	2.07	Install 2-inch Blow Off	10	EA		
28	2.08	Replace Existing 1" Water Services with Copper	350	EA		
29	2.09	Replace Existing 2" Water Services	20	EA		
30	2.10	Replace Existing 1” Split Water Services with Copper	50	EA		
31	2.11	Temporary Water System | 4-inch Bypass	15,000	LF		
32	2.11	Temporary Water System | 2-inch Bypass	20,000	LF		
Water Main Lining Items						
33	3.01	Access Pits	20	EA		
34	3.02	Water Main Cleaning/Lining - Class III | 16-inch	100	LF		
35	3.02	Water Main Cleaning/Lining - Class III | 12-inch	300	LF		
36	3.02	Water Main Cleaning/Lining - Class III | 8-inch	500	LF		
37	3.02	Water Main Cleaning/Lining - Class III | 6-inch	500	LF		
38	3.03	Closed Circuit TV Inspection | 16-inch	100	LF		
39	3.03	Closed Circuit TV Inspection | 12-inch	300	LF		
40	3.03	Closed Circuit TV Inspection | 8-inch	500	LF		
41	3.03	Closed Circuit TV Inspection | 6-inch	500	LF		
42	3.04	Remove Obstruction in Existing Line	20	EA		

TOTAL BASE BID:_____

- BID SUMMARY-

TOTAL BASE BID **$_____**

The BIDDER has received, acknowledged, and used the following addenda in completing the Bid. (Initial and Date as appropriate).

Addendum No. 1	Date _____
Addendum No. 2	Date _____
Addendum No. 3	Date _____
Addendum No. 4	Date _____
Addendum No. 5	Date _____
Addendum No. 6	Date _____
Addendum No. 7	Date _____

The undersigned BIDDER _____ (Contractor Name) certifies that they are licensed as a Contractor under N.C.G.S **§** 87, and that their license number is_____ (License Number).

The undersigned BIDDER hereby agrees to accept an award of the Contract based on the Total Contract Amount as accepted by the OWNER and as indicated on the Notice of Award.

A. BIDDER agrees that Work shall be completed within the time frame indicated in the Agreement as follow:

   1. All work described herein to be complete, including restoration and all punch list items from Notice to Proceed until 365 calendar days.

   2. The BIDDER acknowledges that time is of the essence in this Contract and that the OWNER will suffer financial loss if the Work is not complete within the time specified in Paragraph D.1 above plus any extensions thereof allowed in accordance with these Contract Documents. BIDDER also recognizes the delays, expense and difficulties involved in proving in a legal proceeding the actual loss suffered by the OWNER if the Work is not complete on time. The Bidder agrees to diligently pursue all available work and complete all work in an expeditious manner.

B. The following documents are attached to and made part of this bid:

   Required Bid Security in the form of either a cashier's check or certified check or Bid Bond in the amount of 5% of maximum Bid price.

C. Communications concerning this Bid shall be addressed to: (CONTRACTOR's Name, Address and Telephone Number)

   _____
   _____
   _____
   _____
   _____

D. The terms used in this Bid which are defined in Definitions and Terminology Section of the PWC General Conditions or as otherwise specifically defined in the Contract Documents have the meanings assigned to them therein, which are incorporated by reference as if fully set forth herein.

E. An individual contractor is required to furnish his social security number and sole proprietorship, partnership and corporation are required to furnish their employer identification numbers to Fayetteville Public Works Commission. Please indicate this information on this Bid Form as follows:

   Social Security Number: _____

   Federal Employer Identification Number: _____

   SUBMITTED ON ____day of_____2025

AN **INDIVIDUAL**

BY:_____(SEAL)

(Individual's Name and Signature)

Doing Business as: _____

North Carolina Contractor Registration Number:_____

Business Address:_____

Phone Number: _____

Subscribed and sworn to before me this____day of_____2025

_____

NOTARY PUBLIC

My Commission Expires: _____

A **PARTNERSHIP**

BY:_____(SEAL)

(Firm Name)

(General Partner and Signature)

North Carolina Contractor Registration Number:_____

Business Address:_____

Phone Number: _____

Subscribed and sworn to before me this____day of_____2025

_____

NOTARY PUBLIC

My Commission Expires: _____

A **CORPORATION**

BY: _____ _____

(Corporation Name) (State of Incorporation)

BY:_____(SEAL)_

(Name and Title of Person Authorized to Sign and Signature)

ATTEST: _____

(Secretary or Assistant Secretary and Signature)

North Carolina Contractor Registration Number:_____

Business Address:_____

Phone Number: _____

Subscribed and sworn to before me this____day of_____2025

_____

NOTARY PUBLIC

My Commission Expires: _____

_____

A **JOINT VENTURE**

BY:_____

(Name and Signature)

Doing Business as: _____

North Carolina Contractor Registration Number:_____

Business Address:_____

Phone Number: _____

Subscribed and sworn to before me this____day of_____2025

_____

NOTARY PUBLIC

My Commission Expires: _____

(Each joint venturer must sign. The name of signing for each individual, partnership, and corporation that is a party to the joint venture should be in the manner indicated above.)

WATER MAIN REHABILITATION
CONTRACTOR QUALIFICATION FORM

*****MUST BE COMPLETED AND INCLUDED WITH BID*****

Fayetteville PWC reserves the right to request information from the contractor to complete its assessment of the contractor or subcontractors qualifications. Partially complete forms may be considered non-responsive based on the quantity and quality of information provided. Wholly incomplete forms will be considered non-responsive and will result in rejection of the bid.

CONTRACTOR DOCUMENTATION

(1) Name of **Prime Contractor** and **NC License Number**:	Name: NC License No.:
a. Within the **last five (5) years**, has the contractor been involved in any judgments, claims, or arbitration with regard to construction contracts **If so, provide list and describe each event fully. Attach additional information, as necessary.**	☐Yes (provide list and describe each event fully) ☐No
b. Within the **last five (5) years**, has any officer or principal of the organization ever been an officer or principal of another organization when it failed to complete a construction contract? **If so, provide list and describe each event fully. Attach additional information, as necessary.**	☐Yes (provide list and describe each event fully) ☐No
(2) Name of **Water Main Lining Subcontractor (if applicable)** (If Prime Contractor intends to complete all work, skip to Item 3)	Name: NC License No.:
a. Within the **last five (5) years**, has the subcontractor been involved in any judgments, claims, or arbitration with regard to construction contracts **If so, provide list and describe each event fully. Attach additional information, as necessary.**	☐Yes (provide list and describe each event fully) ☐No
b. Within the **last five (5) years**, has any officer or principal of the subcontractor's organization ever been an officer or principal of another organization when it failed to complete a construction contract? **If so, provide list and describe each event fully. Attach additional information, as necessary.**	☐Yes (provide list and describe each event fully) ☐No

(3) Provide list of other **Subcontractors** and field of specialty (paving, excavation, etc.), if applicable. Additional subcontractors can be attached to the qualifications form, if necessary.

a. Subcontractor Name:	
Specialty:	
b. Subcontractor Name:	
Specialty:	

c. Subcontractor Name:	
Specialty:	
d. Subcontractor Name:	
Specialty:	

PRIME CONTRACTOR WATER MAIN REHABILITATION EXPERIENCE AND RESOURCES

a. The Contractor shall be fully qualified, experienced and equipped to complete the work within the time specified and in a satisfactory manner. The Contractor shall be capable of providing crews as needed to complete the work without undue delay. The Contractor shall provide documentation verifying their experience in water main rehabilitation. A **minimum of 500,000 linear feet (LF)** shall have been installed within the **last three (3) years.**

b. Include the dates of such projects. The client's representative, name, and telephone numbers shall be provided for reference of each project listed. Contractor shall provide references for the Owner to verify project information. Each project should be from separate references. Additional similar projects may be attached at the Contractor's discretion.

Provide the number of **prime contractor crews** qualified and available to perform the work stated in this proposal:			
A. Project Name:			
Location:			
Superintendent:			
Pipe Size/Material:		Length:	
Start Date:		End Date:	
Cost:			
Client:			
Client Contact Name:		Client Phone:	
Scope/Additional Information:			
Subcontractor completing lining (if applicable):			
B. Project Name:			
Location:			
Superintendent:			
Pipe Size/Material:		Length:	
Start Date:		End Date:	
Cost:			
Client:			
Client Contact Name:		Client Phone:	
Scope/Additional Information:			
Subcontractor completing lining (if applicable):			

C. Project Name:			
Location:			
Superintendent:			
Pipe Size/Material:		Length:	
Start Date:		End Date:	
Cost:			
Client:			
Client Contact Name:		Client Phone:	
Scope/Additional Information:			
Subcontractor completing lining (if applicable):			
D. Project Name:			
Location:			
Superintendent:			
Pipe Size/Material:		Length:	
Start Date:		End Date:	
Cost:			
Client:			
Client Contact Name:		Client Phone:	
Scope/Additional Information:			
Subcontractor completing lining (if applicable):			
E. Project Name:			
Location:			
Superintendent:			
Pipe Size/Material:		Length:	
Start Date:		End Date:	
Cost:			
Client:			
Client Contact Name:		Client Phone:	
Scope/Additional Information:			
Subcontractor completing lining (if applicable):			

PRIME CONTRACTOR SUPERINTENDENT EXPERIENCE AND RESOURCES

a. Provide the name of the **proposed prime contractor superintendent and proposed crew leaders/foremen** who are qualified and available to perform the work stated in this proposal:	Proposed Superintendent:	Certified and Trained: ☐ Yes ☐No
	Crew leaders/foreman:	☐ Yes ☐No

IF YOU PLAN TO HAVE MORE THAN ONE SUPERINTENDENT, THEN FILL OUT THIS FORM FOR EACH PROPOSED SUPERINTENDENT.

b. The Contractor's superintendent (named above) shall have been responsible for or managed projects similar in size to this proposed project. Provide not less than **three (3)** references within the **last three (3) years** in the United States to document the proposed superintendent's ability and qualifications on projects of similar size and scope. Each reference shall be from separate projects. Additional similar projects may be attached at the Contractor's discretion.

****The linear footage (LF) in the following Superintendent's References DOES NOT COUNT towards the Prime Contractors' total numbers above.****

A. Project Name:			
Location:			
Superintendent:			
Pipe Size/Material:		Length:	
Start Date:		End Date:	
Cost:			
Client:			
Client Contact Name:		Client Phone:	
Scope/Additional Information:			
B. Project Name:			
Location:			
Superintendent:			
Pipe Size/Material:		Length:	
Start Date:		End Date:	
Cost:			
Client:			
Client Contact Name:		Client Phone:	
Scope/Additional Information:			
C. Project Name:			
Location:			
Superintendent:			

Pipe Size/Material:		Length:	
Start Date:		End Date:	
Cost:			
Client:			
Client Contact Name:		Client Phone:	
Scope/Additional Information:			

D. Project Name:			
Location:			
Superintendent:			
Pipe Size/Material:		Length:	
Start Date:		End Date:	
Cost:			
Client:			
Client Contact Name:		Client Phone:	
Scope/Additional Information:			

E. Project Name:			
Location:			
Superintendent:			
Pipe Size/Material:		Length:	
Start Date:		End Date:	
Cost:			
Client:			
Client Contact Name:		Client Phone:	
Scope/Additional Information:			

F. Project Name:			
Location:			
Superintendent:			
Pipe Size/Material:		Length:	
Start Date:		End Date:	
Cost:			
Client:			
Client Contact Name:		Client Phone:	
Scope/Additional Information:			

WATER MAIN LINING SUBCONTRACTOR EXPERIENCE AND RESOURCES

***NOTE: The following information (Items 1 and 2) SHALL be completed by Prime Contractor if the water main lining will be completed with its own forces.**

1. The water main lining subcontractor shall be trained and certified to operate the water main lining equipment with at least **five (5) years** of experience in lining obtained over the last **five (5) years**. The water main lining contractor shall have a minimum of **700,000 linear foot (LF)** of lining experience. Provide not less than four (4) references within the last five (5) years in the United States to document the water main lining subcontractor's ability and qualifications on projects of similar size and scope. A minimum of **three (3)** of the following projects should be of similar size and scope to this project. Each reference shall be from separate projects.
2. All certifications shall be current. The water main lining subcontractor shall complete the lining installation utilizing its own equipment and labor forces. The lining superintendent shall be an employee of the water main lining subcontractor. **SECOND TIER SUBCONTRACTORS WILL NOT BE ALLOWED**. Additional similar projects may be attached at the Contractor's discretion.

A. Project Name:			
Location:			
Superintendent:			
Pipe Size/Material:		Length:	
Start Date:		End Date:	
Client:			
Client Contact Name:		Client Phone:	
Completed with own equipment and labor forces:			☐ Yes ☐No
If "No" was checked above, provide name of the Contractor completing work:			
Scope/**Project Cost**/Additional Information:			

B. Project Name:			
Location:			
Superintendent:			
Pipe Size/Material:		Length:	
Start Date:		End Date:	
Client:			
Client Contact Name:		Client Phone:	
Completed with own equipment and labor forces:			☐ Yes ☐No
If "No" was checked above, provide name of the Contractor completing work:			
Scope/**Project Cost**/Additional Information:			

C. Project Name:	
Location:	

Superintendent:			
Pipe Size/Material:		Length:	
Start Date:		End Date:	
Client:			
Client Contact Name:		Client Phone:	
Completed with own equipment and labor forces:			☐ Yes ☐No
If "No" was checked above, provide name of the Contractor completing work:			
Scope/**Project Cost**/Additional Information:			

D. Project Name:			
Location:			
Superintendent:			
Pipe Size/Material:		Length:	
Start Date:		End Date:	
Client:			
Client Contact Name:		Client Phone:	
Completed with own equipment and labor forces:			☐ Yes ☐No
If "No" was checked above, provide name of the Contractor completing work:			
Scope/**Project Cost**/Additional Information:			

E. Project Name:			
Location:			
Superintendent:			
Pipe Size/Material:		Length:	
Start Date:		End Date:	
Client:			
Client Contact Name:		Client Phone:	
Completed with own equipment and labor forces:			☐ Yes ☐No
If "No" was checked above, provide name of the Contractor completing work:			
Scope/**Project Cost**/Additional Information:			

WATER MAIN LINING SUPERINTENDENT EXPERIENCE AND RESOURCES

***NOTE: The following information (Items 1 through 3) SHALL be completed by Prime Contractor if the water main lining will be completed with its own forces.**

1. Provide the name of the **proposed water main lining subcontractor superintendent and proposed crew leaders/foremen** who are qualified and available to perform the work stated in this proposal:	Proposed Superintendent:	Certified and Trained: ☐ Yes ☐No
	Crew:	☐ Yes ☐No

IF YOU PLAN TO HAVE MORE THAN ONE SUPERINTENDENT, THEN FILL OUT THIS FORM FOR EACH PROPOSED SUPERINTENDENT.

2. All water main lining operations shall be performed under the constant direction of a superintendent employed by the water main lining subcontractor who shall remain on site and be in responsible charge throughout the lining operation. The supervisor shall, in the **last five (5) years**, have successfully supervised a **minimum of 500,000 linear feet (LF)** of pipe rehabilitated via water main lining of which **450,000 linear feet (LF)** shall be of similar or greater diameter, of similar scope, and of similar or greater lengths as proposed on this project. The references should be from separate projects. Additional projects may be attached to meet the qualification requirements.

A. Project:			
Start Date:		End Date:	
Pipe Size/Material:		Length:	
Client:			
Client Contact Name:		Client Phone:	
B. Project:			
Start Date:		End Date:	
Pipe Size/Material:		Length:	
Client:			
Client Contact Name:		Client Phone:	
C. Project:			
Start Date:		End Date:	
Pipe Size/Material:		Length:	
Client:			
Client Contact Name:		Client Phone:	
D. Project:			
Start Date:		End Date:	
Pipe Size/Material:		Length:	
Client:			
Client Contact Name:		Client Phone:	
E. Project:			
Start Date:		End Date:	
Pipe Size/Material:		Length:	
Client:			

Client Contact Name:		Client Phone:	
F. Project:			
Start Date:		End Date:	
Pipe Size/Material:		Length:	
Client:			
Client Contact Name:		Client Phone:	
3. Provide a list of applicable equipment **(including make/model/size/quantity) <u>owned</u> by the water main lining subcontractor (or the Prime Contractor, should the Prime Contractor complete the lining)** that will be utilized to complete the **lining** scope of work:			
A. **Equipment:**			
Make:			
Model:		Year:	
Size:		Quantity:	
B. **Equipment:**			
Make:			
Model:		Year:	
Size:		Quantity:	
C. **Equipment:**			
Make:			
Model:		Year:	
Size:		Quantity:	
D. **Equipment:**			
Make:			
Model:		Year:	
Size:		Quantity:	
E. **Equipment:**			
Make:			
Model:		Year:	
Size:		Quantity:	
F. **Equipment:**			
Make:			
Model:		Year:	
Size:		Quantity:	
G. **Equipment:**			
Make:			
Model:		Year:	
Size:		Quantity:	
H. **Equipment:**			
Make:			
Model:		Year:	
Size:		Quantity:	
I. **Equipment:**			
Make:			
Model:		Year:	
Size:		Quantity:	
J. **Equipment:**			

Make:			
Model:		Year:	
Size:		Quantity:	
K. **Equipment:**			
Make:			
Model:		Year:	
Size:		Quantity:	

ADDITIONAL ITEMS	
The following items shall be submitted as attachments with the Bid:	
a. The Contractor and/or subcontractor shall be certified and/or licensed as an installer by the manufacturer of the lining system. The **Contractor and/or subcontractor shall submit** a certified statement from the manufacturer that they are certified and/or licensed installer of the lining material.	
b. All manufacturers of lining shall be ISO 9001 or 9002 certified for the design, production, installation, and service of the lining system for a potable water distribution system, and **shall submit** proof of certification.	
c. Number of years of experience in performing this type of work:	
d. Number of years of experience installing proposed lining system:	
e. Contractor must provide most recent W3 Transmittal of Wage and Tax Statement indicating wages and taxes paid by employer.	
f. Affidavit stating any OHSA violations occurring in the past three (3) years.	
g. A statement provided by the Surety Company stating the Bidder's bonding limit and a statement of the amount of work currently under bond.	
The Owner may conduct such investigations/verifications as deemed necessary to establish the responsibility, qualification and financial ability of the Bidder. Should the Owner adjudge that the apparent low bidder is not the lowest responsive, responsible bidder by virtue of the above information furnished, said apparent low bidder will be so notified and his bid security shall be returned to him without prejudice. Failure or refusal to furnish any items of information requested by the Owner shall be considered as non-responsive and therefore basis for rejection of the bid.	
Submitted By (print):	Date:
Title:	
Company:	
Signature:	

SECTION C - ADMINISTRATIVE PROVISIONS

LIST OF SUBCONTRACTORS

In compliance with the Instructions to Bidders and the Supplementary Conditions, the undersigned submits the following names of Subcontractors to be used in performing the Work.

The Bidder certifies that all Subcontractors listed are eligible to perform the Work and that all Subcontractors performing more than five percent of the work are listed.

Subcontractor's Name	Subcontractor's Work	% of Work
		%
		%
		%
		%
		%

Bidder's Signature

BID BOND

This is a Bid Bond that is subject to the provisions of Article 3 of Chapter 44A of the North Carolina General statutes.

This Bond is executed on _____ , 20 _____ .

The name of the PRINCIPAL is _____ (1)

_____ (2)

The name of the SURETY is _____

_____

Fayetteville Public Works Commission, Fayetteville, North Carolina is the OWNER

The amount of the Bond is _____

_____ (Dollars) ($ _____)

KNOW BY ALL MEN BY THESE PRESENTS, the Principal and Surety above named are hereby held and firmly bound unto the above named OWNER hereinafter called the OWNER in the penal sum of the amount stated above in lawful money of the United States, for the payment of which, well and truly to be made, we hereby jointly and severally bind ourselves, our heirs, executors, administrators, successors and assigns.

The condition of the above obligation is such that whereas the Principal has submitted to the OWNER a certain Bid, attached hereto and hereby made a part hereof to enter into a Contract in writing, for the construction of:

PWC2526023 – WATER MAIN REPLACEMENT AND REHABILITATION

NOW, THEREFORE

(a) If said Bid shall be rejected, or in the alternate,

(b) If said Bid shall be accepted and the Principal shall execute and deliver a Contract in the Form of Contract attached hereto (properly completed in accordance with said Bid) and shall furnish a bond for his faithful performance of said Contract, and for the payment of all persons performing labor or furnishing materials in connection therewith, and shall in all other respects perform the agreement created by the acceptance of said Bid, then this obligation shall be void, otherwise the same shall remain in force and effect; it being expressly understood and agreed that the liability of the Surety for any and all claims hereunder shall, in no event, exceed the penal amount of this obligation as herein stated.

The Surety, for value received, hereby stipulates and agrees that the obligations of said Surety and its Bond shall be in no way impaired or affected by any extension of the time within which the Owner may accept such Bid; and said Surety does hereby waive notice of any such extension.

IN WITNESS WHEREOF, the Principal and the Surety have hereunto set their hands and seals, and such of them as are corporations have caused their corporate seals to be hereto affixed and these presents to be signed by their proper officers, the day and year first set forth above.

ATTEST:

_____	_____
(Principal Secretary)	Principal
(SEAL)	
	BY: _____ (3)
	_____
	(Address)
_____	_____
Witness as to Principal	Surety
_____	_____
(Address)	(Address)

ATTEST:

_____
N.C. Resident Agent
(SEAL)

_____
Witness as to Surety

_____
(Address)

(1) Correct name of Contractor
(2) A Corporation, a Partnership or an Individual, as the case may be
(3) If Contractor is a Partnership, all partners should execute Bond

POWER OF ATTORNEY
(Attach)

AFFIDAVIT OF ORGANIZATION AND AUTHORITY SWORN STATEMENT
PWC2526023– WATER MAIN REPLACEMENT AND REHABILITATION

STATE OF _____

COUNTY OF _____

_____being the first duly sworn on oath deposes and says that the Bidder on the attached Bid Form id organized as indicated below and that all statements herein made are made on behalf of such Bidder and that this deponent is authorized to make them.

(Fill Out Applicable Paragraph)

1. CORPORATION

The bidder is a corporation organized and existing under the laws of the State of _____ and its President is_____, and its Secretary is _____, and does have a corporate seal. The _____ is authorized to sign construction Contract and Bids for the company by action of its Board of Directors taken _____, a certified copy of which is hereto attached. (Strike out last sentence if not applicable.)

2. PARTNERSHIP

The Bidder is a Partnership consisting of_____ and _____, partners doing business under the name of _____.

3. SOLE TRADER

The Bidder is an individual and if operating under a trade name, such trade name is as follows: _____

4. ADDRESS

The business address of the Bidder is as follows:

_____

_____

_____ Its phone number is _____

_____

Bidder

By: _____

EQUAL EMPLOYMENT OPPORTUNITY

During the performance of this Contract the Contractor agrees as follows:

a. The Contractor will not discriminate against any employee or applicant because of race, color, religion, sex, or national origin. The Contractor will take affirmative action to ensure that applicants are employed, and that employees are treated during employment, without regard to race, color, religion, sex, or national origin. Such action shall include but not be limited to the following: employment, upgrading, demotion, or transfer, recruitment or recruitment advertising, layoff or termination, rates of pay or other forms of compensation, and selection for training, including apprenticeship. The Contractor agrees to post in conspicuous places, available to employees and applicants for employment, notices setting forth the provisions of the nondiscrimination clause.

b. The Contractor will, in all solicitations or advertisements for employees placed by or on behalf of the Contractor, state that all qualified applicants will receive consideration for employment without regard to race, color, religion, sex, or national origin.

c. The Contractor will send to each labor union or representative of workers with which he has a collective bargaining agreement or other Contract understanding, a notice, to be provided, advising the labor union or worker's representative of the Contractor's commitments under the Equal Employment Opportunity Section of this Contract, and shall post copies of the notice in conspicuous places available to employees and applicants for employment.

d. In the event of the Contractor's noncompliance with the nondiscrimination clauses of this Contract or with any of such rules, regulations, or orders, this Contract may be canceled, terminated, or suspended in whole or in part and the Contractor may be declared ineligible for further OWNER Contracts.

e. The Contractor will include the provisions of this section in every subcontract or purchase order unless exempted by rules, regulations, or orders of the OWNER so that such provisions will be binding upon each Subcontractor or vendor.

(Use the following form for signatures by a CORPORATION):

_____
Corporate Name

ATTEST:

_____ _____
(Assistant) Secretary (Vice) President

(CORPORATE SEAL)

(Use the following form for signatures by and INDIVIDUAL):

BY: _____ (Seal)

WITNESS:

_____

(ACKNOWLEDGEMENT OF THE ABOVE SIGNATURE MUST BE NOTARIZED USING FORM ON FOLLOWING PAGE)

NONDISCRIMINATION CLAUSE

It is specifically agreed as part of the consideration of the signing of this Contract that the parties hereto, their agents, officials, employees or servants will not discriminate in any manner on the basis of age, handicap, race, color, creed, sexual orientation or national origin with reference to the subject matter of this Contract, no matter how remote.

This provision being incorporated for the benefit of Fayetteville Public Works Commission, Fayetteville, North Carolina and its residents may be enforced as set out in said ordinances, enforcement of this provision shall be by action for specific performance, injunctive relief, or other remedy as by law provided.

This provision shall be binding on the successors and assigns of the parties hereto with reference to the subject matter of this Contract.

(Use the following form for signatures by a CORPORATION):

_____
Corporate Name

ATTEST:

_____	BY:	_____
(Assistant) Secretary		(Vice) President
_____	BY:	_____
(Printed Name)		(Printed Name)

(Corporate Seal)

(Use the following form for signatures by a PARTNERSHIP or INDIVIDUAL):

BY:_____(SEAL)

_____
(Printed Name)

WITNESS:

_____

_____
(Printed Name)

NON-COLLUSIVE AFFIDAVIT

State of_____)
)
County of _____)

_____being first duly sworn, deposes and says that:

(1) He is the_____
(Owner, Partner, Officer, Representative or Agent)
of_____the BIDDER that has submitted the attached BID;

(2) He is fully informed respecting the preparation and contents of the attached BID and of all pertinent circumstances respecting such BID;

(3) Such BID is genuine and is not a collusive or sham BID;

(4) Neither the said BIDDER nor any of its officers, partners, owners, agents, representatives, employees or parties in interest, including this affiant, have in any way colluded, conspired, connived or agreed, directly or indirectly, with any other BIDDER, firm, or person to submit a collusive or sham BID in connection with the Contract for which the attached BID has been submitted; or to refrain from bidding in connection with such Contract; or have in any manner, directly or indirectly, sought by agreement or collusion, or communication, or conference with any BIDDER, firm, or person to fix the price or prices in the attached BID or of any other BIDDER, or to fix any overhead, profit, or cost elements of the BID price or the BID price of any other BIDDER, or to secure through any collusion, conspiracy, connivance, or unlawful agreement any advantage against (Recipient), or any person interested in the proposed Contract;

(5) The price or prices quoted in the attached BID are fair and proper and are not tainted by any collusion, conspiracy, connivance, or unlawful agreement on the part of the BIDDER or any other of its agents, representatives, owners, employees or parties in interest, including this affidavit.

BY _____

ITS _____
(Title)

Subscribed and sworn to before me this _____ day of _____ , 20 ___ .

_____
Notary Public

My Commission Expires:

_____

END OF AFFIDAVIT

F.T.A. CERTIFICATION REGARDING LOBBYING

Certification for Contracts, Grants, Loans, and Cooperative Agreements

(To be submitted with each bid or offer exceeding $100,000)

The undersigned ____certifies, to the best of his or her knowledge and belief, that:

(1) No federal appropriated funds have been paid or will be paid, by or on behalf of the undersigned, to any person for influencing or attempting to influence an officer or employee of an agency, a member of Congress, an officer or employee of Congress, or an employee of a member of Congress in connection with the awarding of any federal contract, the making of any federal grant, the making of any federal loan, the entering into of any cooperative agreement, and the extension, continuation, renewal, amendment, or modification of any federal contract, grant, loan, or cooperative agreement.

(2) If any funds other than federal appropriated funds have been paid or will be paid to any person for making lobbying contacts to an officer or employee of any agency, a member of Congress, an officer or employee of Congress, or an employee of a member of Congress in connection with this federal contract, grant, loan, or cooperative agreement, the undersigned shall complete and submit Standard Form--LLL, "Disclosure Form to Report Lobbying," in accordance with its instructions [as amended by "Government wide Guidance for New Restrictions on Lobbying," 61 Fed. Reg. 1413 (1/19/96). Note: Language in paragraph (2) herein has been modified in accordance with Section 10 of the Lobbying Disclosure Act of 1995 (P.L. 104-65, to be codified at 2 U.S.C. 1601, *et seq* .)]

(3) The undersigned shall require that the language of this certification be included in the award documents for all subawards at all tiers (including subcontracts, subgrants, and contracts under grants, loans, and cooperative agreements) and that all subrecipients shall certify and disclose accordingly.

This certification is a material representation of fact upon which reliance was placed when this transaction was made or entered into. Submission of this certification is a prerequisite for making or entering into this transaction imposed by 31, U.S.C. § 1352 (as amended by the Lobbying Disclosure Act of 1995). Any person who fails to file the required certification shall be subject to a civil penalty of not less than $10,000 and not more than $100,000 for each such failure.

[Note: Pursuant to 31 U.S.C. § 1352(c)(1)-(2)(A), any person who makes a prohibited expenditure or fails to file or amend a required certification or disclosure form shall be subject to a civil penalty of not less than $10,000 and not more than $100,000 for each such expenditure or failure.]

The Contractor, _____, certifies or affirms the truthfulness and accuracy of each statement of its certification and disclosure, if any. In addition, the Contractor understands and agrees that the provisions of 31 U.S.C. A 3801, *et seq., apply* to this certification and disclosure, if any.

_____ Signature of Contractor's Authorized Official

_____ Name and Title of Contractor's Authorized Official

_____ Date

CERTIFICATION OF PRIMARY PARTICIPANT REGARDING DEBARMENT, SUSPENSION AND OTHER RESPONSIBILITY MATTERS

The Primary Participant, _____ (major third party contractor), certifies to the best of its knowledge and belief, that it and its principals:

1. Are not presently debarred, suspended, proposed for debarment, declared ineligible, or voluntarily excluded from covered transactions by any Federal department or agency;

2. Have not within a three-year period preceding this proposal been convicted of or had a civil judgment rendered against them for commission of fraud or a criminal offense in connection with obtaining, attempting to obtain, or performing a public (Federal, State or local) transaction or contract under a public transaction; violation of Federal or State antitrust statutes or commission of embezzlement, theft, forgery, bribery, falsification or destruction or records, making false statements, or receiving stolen property;

3. Are not presently indicted for or otherwise criminally or civilly charged by a governmental entity (Federal, State or local) with commission of any of the offenses enumerated in paragraph (2) of this certification; and

4. Have not within a three-year period preceding this application/proposal had one or more public transactions (Federal, State or local) terminated for cause or default.

(If the primary participant is unable to certify to any of the statements in this certification, the participant shall attach an explanation to this certification.)

THE PRIMARY PARTICIPANT _____ CERTIFIES OR AFFIRMS THE TRUTHFULNESS AND ACCURACY OF THE CONTENTS OF THE STATEMENTS SUBMITTED ON OR WITH THIS CERTIFICATION AND UNDERSTANDS THAT THE PROVISIONS OF 31 U.S.C. SECTIONS 3801 ET. SEQ. ARE APPLICABLE THERETO.

_____	_____
Signature	Title
_____	_____
Printed Name	Date

*** THIS PAGE WAS INTENTIONALLY LEFT BLANK***

MINORITY, WOMEN, AND DISADVANTAGED BUSINESS ENTERPRISE PROGRAM

for

Construction, A&E Services, Purchase Contracts, Professional Services, and General Services

Last Revised September 24, 2024

Contents

PURPOSE 4

OVERVIEW 4

I. INTRODUCTION 5

II. ADMINISTRATION 5

III. DEFINITIONS 5

IV. PROCEDURES FOR CONSTRUCTION CONTRACTS 7

- A. Purpose and Application 7
- B. MWDBE Aspirational Goals 7
- C. Invitation for Bids 7
- D. PWC Responsibilities 8
- E. Contractor Good-Faith Efforts 9
- F. Awarding of Construction Contracts 11
- G. Counting MWDBE Participation Toward Meeting the Aspirational Goals 12
- H. Documentation of Attainment of MWDBE Participation Requirements 13

V. PROCEDURES FOR ARCHITECTURE & ENGINEERING (A&E) CONTRACTS 13

- A. Purpose and Application 13
- B. MWDBE Aspirational Goals 14
- C. Request for Qualifications 14
- D. PWC Responsibilities 14
- E. Meeting MWDBE Aspirational Goals 15
- F. Counting MWDBE Participation 15
- G. Provider Good-Faith Efforts 15
- H. Documenting Good-Faith Efforts 16

VI. PROCEDURES FOR PURCHASE CONTRACTS 17

- A. Purpose and Application 17
- B. MWDBE Aspirational Goals 17
- C. Request for Quotes or Invitation for Bids 17
- D. PWC Responsibilities 18
- E. Award of Purchase Contracts 19

VII. PROCEDURES FOR PROFESSIONAL, GENERAL (OTHER) SERVICE CONTRACTS 19

- A. Purpose and Application 20
- B. MWDBE Aspirational Goals 20
- C. PWC's Responsibilities 20
- D. Request for Proposals 21
- E. Meeting MWDBE Aspirational Goals 21
- F. Counting MWDBE Participation 21

G. Provider Good-Faith Efforts 22
I. Documenting Good-Faith Efforts 23
VIII. UTILIZATION OF JOINT VENTURE 23
IX. MWDBE REPORTING PROCEDURE 24
MWDBE COMPLIANCE PROVISIONS 25
Affidavit A: Listing of the Good Faith Efforts 27
Affidavit B: Intent to Perform Contract with Own Workforce 28
Affidavit C: Percentage of MWDBE Participation 29
Affidavit D: Good Faith Efforts 31
Affidavit E: Identification of MWDBE/Local Participation 32
MWDBE ADD / CHANGE FORM 33

PURPOSE

The Fayetteville Public Works Commission (PWC) is committed to promoting the utilization of Minorities, Women, and Disadvantaged Businesses by providing equal opportunity for participating in all aspects of PWC's contracting and procurement programs, including but not limited to, construction projects, A&E services, purchase contracts, and professional and general (other) service contracts.

To achieve this purpose, PWC has established this Minority, Women, and Disadvantaged Business Enterprise Program (MWDBE) to support historically underutilized businesses, encourage capacity development, and offer procurement opportunities to certified business enterprises.

OVERVIEW

PWC's MWDBE Program is a voluntary goals program in construction, A&E services, purchase contracts, and professional and general (other) services based on "good-faith efforts." These goals are established for a five-year period and achievement will be evaluated annually.

The aspirational goals of PWC for the utilization of Minority, Women, and Disadvantaged Business Enterprises are:

Minority business participation in construction services	14%
Women business participation in construction services	11%
Minority business participation in A&E services	6%
Women business participation in A&E services	5%
Minority business participation in purchase contracts	4%
Women business participation in purchase contracts	4%
Minority business participation in professional services	19%
Women business participation in professional services	3%
Minority business participation in general (other) services	9%
Women business participation in general (other) services	4%

I. INTRODUCTION

In 2021, Fayetteville Public Works Commission (PWC) contracted with Griffin & Strong, P.C. (GSPC) to conduct a Disparity Study to determine the effectiveness of the current policies related to local, minority, and women owned businesses and to recommend modifications and adjustments, if necessary, to PWC's policies that comply with the law.

PWC continues to implement race and gender conscious and race and gender-neutral measures to try to increase utilization of Minority, Women, and Disadvantaged Business Enterprise (MWDBE) firms. PWC has a basis to continue race and gender conscious remedies or policies toward achieving annual aspirational goals.

The MWDBE aspirational goals and guidelines developed and recommended do not require nor provide for racially based set-asides; rather they require good-faith effort by both local government and contractors to recruit and select minorities and women businesses, consistent with North Carolina Statues and the Constitution of the United States as interpreted by the Croson Decision.

II. ADMINISTRATION

PWC General Manager/CEO is authorized to take all usual and legal administrative actions necessary to implement this Program. The ultimate responsibility for the MWDBE Program administration is assigned to the PWC General Manager/CEO or its designee. PWC General Manager/CEO or its designee is either to be personally responsible or to designate a specific person to coordinate and manage this Program. PWC General Manager/CEO or its designee is responsible for determining whether a contractor has complied with this Program and shown good-faith efforts to do so. Except for those staff services specifically assigned by this Program to other departments, the heads of departments responsible for the construction, and procurement of services and goods shall be responsible to PWC General Manager/CEO or its designee and shall cooperate with PWC General Manager/CEO or its designee in implementing this Program.

The MWDBE Program shall apply to all construction contracts, A&E contracts, purchase contracts, and services as specified in Sections IV through VII. The provisions of this Program take precedence over any other department plans or procedures in conflict herewith, except specific requirements mandated by terms or conditions of agreements in force between PWC and the federal government or the State of North Carolina that require different procedures than those described in this Program. This Program will be evaluated at the end of five years to determine its effectiveness and what adjustments are required.

III. DEFINITIONS

Affirmative Action - Specific steps to eliminate discrimination and efforts to ensure nondiscriminatory results and practices in the future, and to fully involve Minority, Women, and Disadvantaged Business Enterprises in contracts and programs.

Aspirational Goal/Goal - A voluntary percentage or quantitative objective.

Bidder/Participant - Any person, firm, partnership, corporation, association, or joint venture seeking to be awarded a public contract or subcontract.

Contract - A mutually binding legal relationship or any modification thereof obligating the seller to furnish equipment or service, including construction and leases, and obligating the buyer to pay for them.

Contractor - Any person, firm, partnership, corporation, association, or joint venture that has been awarded a public contract or lease, including every subcontract on such a contract.

Day – A calendar day of 24 hours measured from midnight to the next midnight. Also referred to throughout the Program documents as "days or "calendar days."

Discrimination - To distinguish, differentiate, separate and/or segregate on the basis of age, race, religion, color, sex, national origin, handicap and/or veteran status.

Equipment - Includes materials, supplies, commodities, and apparatus.

Joint Venture - An association of two or more businesses to carry out a single business enterprise for profit, for which purpose they combine their property, capital, efforts, skills, and knowledge.

Lessee - A business that leases, or is negotiating to lease, property from PWC or equipment or services to PWC, or to the public on PWC property.

Minority - A person who is a citizen or lawful permanent resident of the United States and who is:

a. Black American (a person having origins in any of the black racial groups of Africa);

b. Hispanic American (a person of Mexican, Puerto Rican, Cuban, Central or South American, or other Spanish culture or origin, regardless of race);

c. Portuguese (a person of Portuguese, Brazilian, or other Portuguese culture origin, regardless of race);

d. Asian American (a person having origins in any of the original people of the Far East, Southeast Asia, the Indian sub-continent, or the Pacific Islands); and

e. Native American (a person having origins in any of the original people of North America).

MWDBE - Any certified minority, women, and disadvantaged business enterprise.

Minority, Women, Disadvantaged Business Enterprise (MWDBE) - A business that is at least fifty-one (51) percent owned and controlled by minority group members or women. An MWDBE is **bona fide** only if the minority group or female ownership interests are real and continuing and not created solely to meet the MWDBE requirement. In addition, the MWDBE must itself perform satisfactory work or services or provide supplies under the contract and not act as a mere conduit. In short, the contractual

relationship must also be **bona fide.**

IV. PROCEDURES FOR CONSTRUCTION CONTRACTS

A. Purpose and Application

1. The general purpose of this Program is to help develop and support Minority, Women, and Disadvantaged Business Enterprises (MBE, WBE, and DBE) by providing opportunities for participation in the performance of all construction contracts financed entirely with PWC funds.

2. This Program shall apply to construction contracts when the PWC's estimated contract cost is $100,000 or more, except when a contract is exempt from competitive bidding under the General Statutes of North Carolina. Contracts between $30,000 and $99,999.99 will also be covered by the exemption.

3. Where contracts are financed in whole or in part with federal or state funds, including grants, loans, or other funding sources containing MBE, WBE, DBE Programs, PWC will follow the federal government or the State of North Carolina. PWC General Manager/CEO or its designee will be responsible for monitoring the Program to ensure the goals are met.

4. Since PWC construction contracts are prepared by the Engineering and Facilities Departments, each of these departments shall prepare such documents with Procurement pre-approved templates for the bidding process, which includes the Program goals as required to implement this Program.

    a. Within sixty (60) days of the Commission's approval of this Program, the departmental procedures and contract provisions shall be in effect for all bid documents issued after the date of Commission approval.

B. MWDBE Aspirational Goals

1. To implement the purpose of this Program, the goal shall be to award at least fourteen (14) percent of the total of all construction contract award amounts in each fiscal year to MBE firms and at least eleven (11) percent to WBE firms.

2. PWC General Manager/CEO or its designee may determine that higher or lower goals are appropriate on a project-by-project basis, where it can be shown that the type, size, or location of the project will affect the availability of MBE, WBE, or DBE firms, so long as the aggregate of all contracts does not lower the annual goals.

C. Invitation for Bids

1. Bidders shall submit MWDBE information with their bids. Such information shall be subject to verification by MWDBE Program staff before awarding the contract. The information shall include the names of the MWDBEs to be used and the dollar value of each such MWDBE transaction.

2. Contractors, subcontractors, suppliers, or MWDBE members of a joint venture intended to satisfy the PWC's MBE/WBE/DBE goals shall be certified by the State Department of Transportation (DOT) or North Carolina Office of Historically Underutilized Business (HUB).

D. PWC Responsibilities

1. **MWDBE Directory** – The MWDBE Program staff will establish and maintain a directory of certified Minority, Women, and Disadvantaged Business Enterprises. The purpose of the directory is to provide a resource for prime bidders on PWC construction projects who intend to solicit bids from MBE and WBE subcontractors and suppliers to meet PWC's MBE and WBE goals. The directory will not constitute a recommendation or endorsement of any listed firm.

   The directory will be developed and maintained by the MWDBE Program Staff.

   a. The directory will include:

      i. Business name, address, telephone number, and email address;
      ii. Name(s) of business owner(s);
      iii. Type of license;
      iv. NAICS;
      v. Type of MWDBE certification, and;
      vi. Certification and expiration date with an acceptable agency.

   b. PWC shall advertise on a contract-by-contract basis throughout the year as deemed necessary for MWDBE outreach. Advertisements shall be placed with minority/women-focused publications (state and local). Notification will also be sent to community organizations which might have knowledge of MWDBE firms.

   c. The department heads and MWDBE Program staff should attend local and regional business fairs to promote the MWDBE Program. The departments shall also identify potentially eligible contractors through affirmative action efforts and the normal course of business. The names of identified contractors shall be forwarded to the MWDBE Program staff.

2. **MWDBE Eligibility Standards –** The eligibility of a business is determined by the ownership and control of the business.

   a. An eligible Minority Business Enterprise owner is a citizen or lawful permanent resident of the United States, a member of a recognized ethnic or racial group, and fifty-one (51) percent owner of the business.

   b. The eligible ethnic or racial groups are:

      i. Black/African American
      ii. Hispanic American
      iii. Asian American

iv. Native American

c. An eligible Women Business Enterprise owner is a citizen or lawful resident of the United States and a fifty-one (51) percent owner of the business and is female.

3. **Removal of MWDBE Procedures -** A contractor certified as a MWDBE may be removed from the program directory for, but not limited to, any of the following reasons:

   a. **Change of Status** - PWC General Manager/CEO or its designee may remove a MWDBE if he/she finds that the ownership or control of the business changes so that the business no longer meets the requirements of Section IV, D(2) (b) and (c) above.

   b. **Failure to comply with the MWDBE Program** - The certification of a business as a MWDBE may be removed by PWC General Manager/CEO or its designee if he/she finds any of the following conditions:

      i. That a business has submitted inaccurate, false or incomplete information to PWC;
      ii. That in performance of a contract, a business has failed to comply with requirements of the contract with PWC;
      iii. That in performance of a contract, a business has failed to comply with MWDBE requirements of a contract established by a contractor with PWC in response to PWC requirements; or
      iv. That a business has otherwise failed to comply with the provisions of this MWDBE Program.

   c. **Appeal of Removal -** A business may appeal a determination of a MWDBE by satisfying the eligibility requirements in Section IV, D (2) (b) and (c).

   d. **Pre-bid Meeting or Site Visit -** PWC may hold a pre-bid meeting on formal and informal bid contracts for all prospective bidders, subcontractors, and MWDBEs for the purpose of explaining the provisions of the MWDBE Program, the process for bidding, and the contract to be performed. Available data on MWDBEs interested and/or capable of engaging in the prospective contract shall be made available to prospective bidders, contractors, and subcontractors.

E. Contractor Good-Faith Efforts

The contractor (bidder) shall make good-faith efforts to encourage the participation of MWDBEs in projects prior to submission of bids in order to be considered as a responsive bidder. A good-faith effort shall include, at a minimum, specific affirmative action steps and complete documentation thereof. The following list of factors to determine good-faith effort is not exclusive or exhaustive:

1. Whether the bidder attended any pre-submittal or pre-bid meetings, if scheduled

by PWC;

2. Whether the bidder identified and selected specific items of the project for which the contract could be performed by Minority and/or Women Business Enterprises, to provide an opportunity for participation by those enterprises (including, where appropriate, breaking down contracts into economically feasible units to facilitate MWDBE participation);

3. Whether the bidder advertised, a reasonable time before the date the bids are opened, in one or more daily or minority weekly newspapers or trade associations (i.e., N.C. Minority Business Association), trade journals, or other media;

4. Whether the bidder provided email notice of their interest in bidding on the contract to at least three (3) Minority, Women, or Disadvantaged Business Enterprises (for each identified sub-item of the contract) licensed to provide the specific items of the project a reasonable time prior to the opening of bids;

5. Whether the bidder provided interested Minority, Women, and Disadvantaged Business Enterprises with information about the Plan, specifications, and requirements for the selected subcontracting or material supply work;

6. Whether the bidder contacted PWC's MWDBE Program staff for assistance in identifying minority and women businesses certified with approved public agencies as referenced in Section IV, D (2) (b) and (c);

7. Whether the bidder negotiated in good-faith with Minority, Women, or Disadvantaged Business Enterprises and did not unjustifiably reject as unsatisfactory bids prepared by a Minority, Women, or Disadvantaged Business Enterprises, as defined by PWC;

8. Whether the bidder, where applicable, advised and made efforts to assist interested MWDBEs in obtaining bonds, lines of credit, or insurance required by PWC or contractor;

9. Whether the bidder's efforts to obtain MWDBEs participation could reasonably be expected by PWC to produce a level of participation sufficient to meet the goals of PWC.

Bidders are cautioned that even though their submittal indicates they will meet the MWDBE goals, they should document their good- faith efforts and be prepared to submit this information to protect their eligibility for award of the contract in the event PWC questions whether the good-faith requirement has been met.

10. **Performance of MBE/WBE/DBE Subcontractors and Suppliers** - The MWDBEs listed by the contractor on the Program Affidavits, which is determined by PWC to be certified, shall perform the work and supply the materials for which they are listed unless the contractor has received prior written authorization from PWC to perform the work with other forces or to obtain the materials from other sources.

The contractor shall enter into subcontracts and supply copies of all fully executed subcontracts with each MWDBE listed on the Program Affidavits to PWC's MWDBE Program staff after award of the contract and prior to the issuance of a Notice to Proceed. Any amendments to the subcontracts shall be submitted to the MWDBE Program staff within **five (5) days** of execution.

Authorization to utilize other forces or sources of materials shall be requested by submitting a “Change or Add a Subcontractor Form” for the following reasons:

a. The listed MWDBE, after having had a reasonable opportunity to do so, fails or refuses to execute a written contract, when such written contract, based upon the general terms, conditions, plans and specifications for the project, or on the terms of such subcontractor's or supplier's written bid, is presented by the contractor.

b. The listed MWDBE becomes bankrupt or insolvent.

c. The listed MWDBE fails or refuses to perform his/her subcontract or furnish the listed materials.

d. The work performed by the listed subcontractor is unsatisfactory according to industry standards and is not in accordance with the plans and specifications; or the subcontractor is substantially delaying or disrupting the progress of the work.

All “Change or Add a Subcontractor Forms” shall be accompanied by good faith efforts documentation as specified on the form.

F. Awarding of Construction Contracts

1. If a construction contract is to be awarded, it shall be awarded in accordance with North Carolina General Statutes to the lowest responsible bidder who complies with all of the prescribed requirements and either:

    a. Made a good-faith effort to comply with these goals and requirements before the time bids are opened as described above. Where a good-faith effort is claimed by the apparent lowest responsible bidder, the bidder shall be required to submit documentation **WITHIN TWENTY-FOUR (24) HOURS OF PWC'S NOTIFICATION**, which in most instances will occur the day of bid opening to show that the criteria for good-faith efforts have been met, or

    b. Once a firm is determined to be an eligible MWDBE, and before the contract is awarded, the total dollar value to be paid to the MWDBE shall be evaluated by the MWDBE Program Staff to ensure that it is in accordance with the bidder's proposal.

If the evaluation shows that the bidder has misrepresented MWDBE participation or has not made a good-faith effort to meet the contract goals for MBE or WBE

participation, the bidder may be disqualified.

G. Counting MWDBE Participation Toward Meeting the Aspirational Goals

The degree of participation by MWDBE contractors, subcontractors, suppliers, or joint-venture partners in contract awards shall be counted in the following manner:

1. Once a firm is determined to be an eligible MWDBE contractor in accordance with this Program, the total dollar value of the contract awarded to the MWDBE is counted as participation.

2. The goals can be met by any certified MWDBE contractor, subcontractor, supplier, trucker, or joint-venture partner as listed in PWC and agency directory. All MWDBEs used to meet the goal must be certified by an approved agency and verified by PWC at the time of bid opening. Only certified firms can be counted toward the goal. The standard for certification is set forth in this Program.

3. The total dollar value of a contract with a disadvantaged business owned and controlled by a minority woman is counted toward either the minority goal or the goal for women, but not toward both. The contractor or MWDBE Program staff may choose the goal to which the value is applied.

4. In the case of a joint venture, the joint venture recipient or contractor may count toward its MWDBE goals a portion of the total dollar value of the contract that the MWDBE partner's participation in the joint-venture represents. Credit will be given equal to the minority partner's percentage of ownership in the joint venture. A MWDBE joint-venture partner must be responsible for a clearly defined portion of the work to be performed in addition to satisfying requirements for ownership and control.

5. A recipient or contractor may count toward its MWDBE goals only expenditures to MWDBEs whose ownership interests are real and continuing and not created solely to meet PWC's goals for participation, and that perform a commercially useful function in the work of a contract. A MWDBE is considered to perform a commercially useful function when it is responsible for execution of a distinct element of the work of a contract and carries out its responsibilities by actually performing, managing, and supervising the work involved. To determine whether a MWDBE is performing a commercially useful function, the MWDBE Program staff shall evaluate the amount of work subcontracted, industry practices, and other relevant factors. Consistent with normal industry practices, an MWDBE may enter into subcontracts. If a MWDBE contractor subcontracts a significantly greater portion of the work of the contract than would be expected on the basis of normal industry practices, the MWDBE shall be presumed not to be performing a commercially useful function. Evidence to rebut this presumption may be presented to the MWDBE Program staff. The MWDBE may present evidence to rebut this presumption. The MWDBE Program staff decision on the rebuttal of this presumption is subject to review by PWC General Manager/CEO or its designee. Once a contractor is determined to be an eligible MWDBE in accordance with this section, the total dollar value of the contract awarded to MWDBE is counted toward the applicable MWDBE goals, except as provided in

the provisions of this section.

6. A contractor may count toward its MWDBE goals expenditures for materials and supplies obtained from MWDBE suppliers and manufacturers, provided that the MWDBE assumes the actual and contractual responsibility for the provision of the materials and supplies.

H. Documentation of Attainment of MWDBE Participation Requirements

In order that PWC General Manager/CEO or its designee may make a recommendation to PWC as to the responsiveness of bidders, bidders shall be required to submit the following information on each MWDBE-related subcontract:

1. A description of the subcontract and purchase(s) of significant equipment and supplies to be used to perform the subcontract or prime contract, including the name and address of each MWDBE firm selected, and the name and telephone number of a contact person;

2. The dollar amount of participation of each MWDBE;

3. A statement of intent from the MWDBE subcontractor or material supplier as;

    a. Identified in Section IV, H(1) above that they intend to contract or supply the materials, or

    b. Sworn statements, with appropriate documentation, showing that the contractor made a good-faith effort to comply with the MWDBE Program in accordance with Section IV, E of this Program.

V. PROCEDURES FOR ARCHITECTURE & ENGINEERING (A&E) CONTRACTS

A. Purpose and Application

1. The general purpose (goal) of this Program is to help develop and support MWDBEs by providing opportunities for participation in the performance of PWC's A&E contracts financed entirely with PWC funds.

2. This Program applies to all A&E contracts except contracts in those unique circumstances where written exemption of particular contracts is determined as an exception, and less than fifty thousand dollars ($50,000.00) by PWC General Manager/CEO. PWC General Manager/CEO or its designee will be responsible for administering and monitoring the Program to ensure that appropriate action(s) are taken in efforts of achieving the goals.

3. Where contracts are funded in whole or in part with federal or state funds and the grants, loans, or other funding sources containing MWDBE Program requirements, PWC General Manager/CEO or its designee will be responsible for monitoring the Program to ensure the goals are met.

4. Since PWC Request for Qualifications (RFQ) are prepared by the Engineering and Facilities Departments, each of these departments shall prepare such documents with Procurement pre-approved templates for the qualification-based selection process, which includes the Program goals as required to implement this Program.

B. MWDBE Aspirational Goals

1. To implement this Program, the goal shall be to award six percent (6%) of the total A&E contract dollars awarded in each fiscal year to MBE firms and five percent (5%) to WBE firms. The goals will become effective on the date that PWC approves the Program and continue for a period of five (5) years.

C. Request for Qualifications

1. It is not required that contracts under $50,000 meet the contract goal. When possible, at least twenty-five (25) percent of the firms notified of the contract opportunity shall be MWDBE. A list of available firms will be provided by the MWDBE Program staff to the Procurement Advisor and Department. The MWDBE Program staff shall track and report the firms that are notified and that provide submittals.

D. PWC Responsibilities

1. Identification of MWDBE Firms

a. The MWDBE Program staff will establish and maintain a directory of certified Minority, Women, and Disadvantaged Business Enterprises. The purpose of the directory is to provide a resource on PWC A&E projects. The directory will not constitute a recommendation or endorsement of any listed firm. The directory will be developed and maintained by the MWDBE Program Staff.

b. The directory will include:

   i. Business name, address, telephone number, and email address;
   ii. Name(s) of business owner(s);
   iii. Type of license;
   iv. NAICS;
   v. Type of MWDBE certification, and;
   vi. Certification and expiration date with an acceptable agency.

c. PWC shall advertise on a contract-by-contract basis throughout the year as deemed necessary for MWDBE outreach. Advertisements shall be placed with minority/women-focused publications (state and local). Notification will also be sent to community organizations which might have knowledge of MWDBE firms.

d. The department heads and MWDBE Program staff should attend local and regional business fairs to promote the MWDBE Program. The departments shall also identify potentially eligible firms through affirmative action efforts and the normal course of business. The names of identified firms shall be forwarded to the MWDBE Program staff.

E. Meeting MWDBE Aspirational Goals

1. Goals must be met by awarding contracts to certified MWDBE firms. The MWDBE must be certified at the time of the contract award. MWDBE firms not certified at the time of the contract award will not be counted towards MWDBE goals. MWDBE goals may be met by a certified joint venture or partnership. In the case of joint ventures or partnerships, MWDBE participation counted toward the goal will be equal to the percentage of the total dollar value of the contract that the MWDBE partner is responsible for performing.

F. Counting MWDBE Participation

1. The total dollar value of a contract with a disadvantaged business owned and controlled by a minority woman is counted toward either the minority goal or the goal for women, but not toward both. The contractor or MWDBE Program staff may choose the goal to which the value is applied.

2. If a determination is made by the MWDBE Program staff that the goals have not been met, the prime service provider will be required to submit a good-faith effort statement prior to PWC awarding the contract.

G. Provider Good-Faith Efforts

The following is a list of the efforts that should be made by the prime A&E firm to encourage MWDBE participation. In order to receive credit for having made "good faith efforts", the prime A&E firm should document all actions taken to include the following:

1. Attending pre-bid meetings scheduled by the department;

2. Identifying selected specific items of the project which could be executed by a MWDBE;

3. Soliciting MWDBE A&E firm participation in a reasonable time before the solicitations are due through advertisements in circulation media, trade publications, and minority-focused media;

4. Contacting local firms, firms owned by minorities or women, and associations or business development centers which disseminate information to local businesses and businesses owned by minorities or women in a timely manner to allow sufficient time for MWDBEs to respond;

5. Following up on initial solicitations of interest by contacting the MWDBE to determine whether the MWDBE was interested in performing specific items of the

project;

6. Attempting to enter into joint venture or partnership arrangements with MWDBEs and provide interested MWDBEs with information about the requirements for the project;

7. Providing assistance to MWDBEs in the review of qualification submittal and work to be done by sub-A&E firms;

8. Using available directories of certified MWDBEs and other available resources;

9. Ensuring that the firm negotiated in good faith with the MWDBE and did not unjustifiably reject as unsatisfactory qualifications prepared by any Minority, Women, or Disadvantaged Business Enterprise;

10. Making every effort to obtain Minority, Women, or Disadvantaged Business Enterprise participation that could reasonably be expected to produce a level of participation sufficient to meet the goals of PWC; and

11. Providing interested minority, women, and disadvantaged businesses with information relative to project requirements.

H. Documenting Good-Faith Efforts

If the prime A&E firm does not meet the goals for MWDBE participation at the time of qualification submittal, then the following documents indicating "good-faith efforts" should be submitted as a minimum:

1. A report of all proposals received by the prime service provider from MWDBE sub-A&E firms must indicate the action taken by the prime A&E firm in response to the qualification submittal. In cases where proposals have been rejected, the reason for rejection must be indicated.

2. Documentation of efforts to enter into agreements with MWDBEs for sub-A&E work or arrangements for joint ventures, partnerships, or other multi-entity relationships. Also included should be a statement of why agreements or arrangements were not made.

3. Proof of contact with MWDBEs and associations or business development centers that disseminate information to MWDBEs.

4. A copy of emails or notices sent to groups in Section VI, J(3) above notifying them of the firm’s intent to submit a qualification submittal to PWC. The emails or notices should indicate the areas of work available for sub-A&E firms.

5. Description of assistance provided to MWDBEs in review of the qualification submittal and work to be done by sub-A&E firms.

6. Description of the use made by firms of available resources such as directories of MWDBEs.

7. Documentation of advertisements sent to general circulation media, trade publications, and minority-focused media.

8. Proof of attendance at any pre-bid meeting.

If the prime A&E firm fails to meet the MWDBE goals with its proposed project team and cannot provide documentation of "good-faith efforts", these failures will be noted to the involved department by the MWDBE Program Staff, and the firm may be disqualified.

VI. PROCEDURES FOR PURCHASE CONTRACTS

A. Purpose and Application

1. The general purpose of this Program is to help develop and support Minority, Women, and Disadvantaged Business Enterprises (MBE, WBE, and DBE) by providing opportunities for participation in purchase contracts financed entirely with PWC funds.

2. This Program shall apply to purchase contracts over $30,000 for apparatus, materials, supplies and purchase contracts for goods where the patent-holder is not the sole supplier. PWC General Manager/CEO or its designee will be responsible for monitoring the Program to ensure the goals are met.

3. Where contracts are funded in whole or in part with federal or state funds and the grants, loans, or other funding sources containing MWDBE Program requirements, PWC General Manager/CEO or its designee will be responsible for monitoring the Program to ensure the goals are met.

4. Since PWC purchase contracts are prepared by various departments, each of these departments shall prepare such documents with Procurement pre-approved templates for the quote or bid process, which includes the goals as required to implement this Program. PWC Departments shall document and provide to the MWDBE Program staff a list of all providers notified and responses received for informal purchases.

B. MWDBE Aspirational Goals

1. To implement the purpose of this Program, the goal shall be to award at least four (4) percent of the total of all purchase contract award amounts in each fiscal year to MBEs and at least four (4) percent to WBE firms. It is further the intent of PWC to encourage, to the extent allowed the use of local vendors (defined as located within Cumberland, Hoke, or Harnett County) whenever doing so is consistent with the requirements under G.S. 143-129.

C. Request for Quotes or Invitation for Bids

1. The various departments soliciting goods will be responsible for contacting from the directory at least one MBE and one WBE for a price quotation of $30,000 or more on each purchase contract with MWDBE availability.

2. A list of available MWDBEs will be provided by the MWDBE Program staff to the Procurement Advisor and Department. The MWDBE Program staff shall track and report the MWBDEs that are notified and that provide submittals.

D. PWC Responsibilities

1. Identification of MWDBEs

a. The MWDBE Program staff will establish and maintain a directory of certified Minority, Women, and Disadvantaged Business Enterprises. The purpose of the directory is to provide a resource for on PWC purchase contracts. The directory will not constitute a recommendation or endorsement of any listed supplier. The directory will be developed and maintained by the MWDBE Program Staff.

b. The directory will include:

i. Business name, address, telephone number, and email address;
ii. Name(s) of business owner(s);
iii. NAICS;
iv. Type of MWDBE certification, and;
v. Certification and expiration date with an acceptable agency.

c. PWC shall advertise on a contract-by-contract basis throughout the year as deemed necessary for MWDBE outreach. Advertisements shall be placed with minority/women-focused publications (state and local). Notification will also be sent to community organizations which might have knowledge of MWDBE suppliers.

d. The department heads and MWDBE Program staff should attend local and regional business fairs to promote the MWDBE Program. The departments shall also identify potentially eligible suppliers through affirmative action efforts and the normal course of business. The names of identified suppliers shall be forwarded to the MWDBE Program staff.

2. **MWDBE Eligibility Standards –** The eligibility of a business is determined by the ownership and control of the business.

a. An eligible Minority Business Enterprise owner is a citizen or lawful permanent resident of the United States, a member of a recognized ethnic or racial group, and fifty-one (51) percent owner of the business.

b. The eligible ethnic or racial groups are:

i. Black/African American
ii. Hispanic American
iii. Asian American
iv. Native American

c. An eligible Women Business Enterprise owner is a citizen or lawful resident of the United States and a fifty-one (51) percent owner of the business and is female.

3. **Removal of MWDBE Procedures -** A supplier certified as a MWDBE may be removed from the program directory for, but not limited to, any of the following reasons:

a. **Change of Status** - PWC General Manager/CEO or its designee may remove a MWDBE if he/she finds that the ownership or control of the business changes so that the business no longer meets the requirements of Section IV, D(2) (b) and (c) above.

b. **Failure to comply with the MWDBE Program** - The certification of a business as a MWDBE may be removed by PWC General Manager/CEO or its designee if he/she finds any of the following conditions:

i. That a business has submitted inaccurate, false or incomplete information to PWC;
ii. That in performance of a contract, a business has failed to comply with requirements of the contract with PWC;
iii. That in performance of a contract, a business has failed to comply with MWDBE requirements of a contract established by a contractor with PWC in response to PWC requirements; or
iv. That a business has otherwise failed to comply with the provisions of this MWDBE Program.

c. **Appeal of Removal -** A business may appeal a determination of a MWDBE by satisfying the eligibility requirements in Section IV, D (2) (b) and (c).

d. **Pre-bid Meeting or Site Visit -** PWC may hold a pre-bid meeting on formal and informal bid contracts for all prospective bidders, subcontractors, and MWDBEs for the purpose of explaining the provisions of the MWDBE Program, the process for bidding, and the contract to be performed. Available data on MWDBEs interested and/or capable of engaging in the prospective contract shall be made available to prospective bidders, contractors, and subcontractors.

E. Award of Purchase Contracts

1. If a purchase contract is to be awarded, it shall be awarded in accordance with North Carolina General Statutes and/or other applicable PWC, Commission, and State regulations.

VII. PROCEDURES FOR PROFESSIONAL, GENERAL (OTHER) SERVICE CONTRACTS

A. Purpose and Application

1. The general purpose (goal) of this Program is to help develop and support MWDBEs by providing opportunities for participation in the performance of PWC's professional service contracts and general (other) service contracts (hereinafter referred to as service contracts).

2. This Program applies to all service contracts except contracts under $30,000, and in those unique circumstances where PWC General Manager/CEO or its designee determines that an exception is necessary.

3. Where contracts are funded in whole or in part with federal or state funds and the grants, loans, or other funding sources containing MWDBE Program requirements, PWC General Manager/CEO or its designee will be responsible for monitoring the Program to ensure the goals are met.

4. PWC General Manager/CEO or its designee will be responsible for administering and monitoring the Program to ensure that appropriate action(s) are taken in efforts of achieving the goals.

B. MWDBE Aspirational Goals

1. To implement this Program, the goal shall be to award nine percent (9%) of the total service contract dollars awarded in each fiscal year to MBE firms and four percent (4%) to WBE firms. The goals will become effective on the date that PWC approves the Program and continue for a period of five (5) years.

C. PWC's Responsibilities

1. Identification of MWDBE Firms

a. The MWDBE Program staff shall establish and maintain a directory of certified MWDBE service providers that shall be made available to all departments to assist them in identifying appropriate MWDBE service providers that can be used to meet PWC's MWDBE goals. The directory shall include the businesses which provide the services routinely procured by PWC and the NAICS which the businesses are capable of providing. The directory will not constitute a recommendation or endorsement of any listed business. The directory will include:

   i. Business name, address, and telephone number;
   ii. Name(s) of business owner(s);
   iii. NAICS of services available;
   iv. Type of MWDBE certification, and;
   v. Certification and expiration date with an acceptable agency.

b. PWC shall provide a list of opportunities at least 30 days prior to each fiscal year (July) for MWDBE service providers. Advertisements shall

be placed with minority/women-focused publications (state and local). Notification will also be sent to community organizations that might have knowledge of MWDBE firms. Interested MWDBEs shall provide a letter of interest within **14 calendar days** of the advertisement.

c. For opportunities that arise throughout the fiscal year, PWC shall provide an Advertisement for opportunity to but not limited to MWDBE service providers within the MWDBE directory and identified MWDBEs from the Disparity Study. Advertisements shall be placed with minority/women-focused publications (state and local). Notification will also be sent to community organizations that might have knowledge of MWDBE firms. Interested MWDBEs shall provide a letter of interest within **7 calendar days.**

d. The department heads and MWDBE Program staff should attend local and regional business fairs to promote the MWDBE Program. The departments shall also identify potentially eligible service providers through affirmative action efforts and the normal course of business. The names of identified businesses shall be forwarded to the MWDBE Program staff.

D. Request for Proposals

1. MWDBE contract goals shall be set for service contracts over $30,000.00. The request for proposals shall state the contract goals of four (4) percent for both MWDBE Professional and General Service contractors.

2. Contracts under $30,000 and contracts without letters of interest are not required to meet the contract goal.

3. A list of available service providers will be provided by the MWDBE Program staff to the Procurement Advisor(s) and department(s). The MWDBE Program staff shall track and report the service providers that are notified and that provide proposals.

E. Meeting MWDBE Aspirational Goals

1. Goals must be met by awarding contracts to certified MWDBE service providers. The MWDBE must be certified at the time of the contract award. MWDBE service providers not certified at the time of the contract award will not be counted towards MWDBE goals. MWDBE goals may be met by a certified joint venture or partnership. In the case of joint ventures or partnerships, MWDBE participation counted toward the goal will be equal to the percentage of the total dollar value of the contract that the MWDBE partner is responsible for performing.

F. Counting MWDBE Participation

1. The total dollar value of a contract with a disadvantaged business owned and controlled by a minority woman is counted toward either the minority goal or the goal for women, but not toward both. The contractor or MWDBE Program staff

may choose the goal to which the value is applied.

2. If a determination is made by the MWDBE Program staff that the goals have not been met, the prime service provider will be required to submit a good-faith effort statement prior to PWC awarding the contract.

G. Provider Good-Faith Efforts

The following is a list of the efforts that should be made by the prime service provider to encourage MWDBE participation. In order to receive credit for having made "good faith efforts", the prime service provider should document all actions taken to include the following:

1. Attending pre-bid meetings scheduled by the department;

2. Identifying selected specific items of the project which could be executed by a MWDBE;

3. Soliciting MWDBE service provider participation in a reasonable time before the proposals are due through advertisements in circulation media, trade publications, and minority-focused media;

4. Contacting local firms, firms owned by minorities or women, and associations or business development centers which disseminate information to local businesses and businesses owned by minorities or women in a timely manner to allow sufficient time for MWDBEs to respond;

5. Following up on initial solicitations of interest by contacting the MWDBE to determine whether the MWDBE was interested in performing specific items of the project;

6. Attempting to enter into joint venture or partnership arrangements with MWDBEs and provide interested MWDBEs with information about the requirements for the project;

7. Providing assistance to MWDBEs in the review of proposals and work to be done by sub-service providers;

8. Using available directories of certified MWDBEs and other available resources;

9. Ensuring that the proposer negotiated in good faith with the MWDBE and did not unjustifiably reject as unsatisfactory quotes prepared by any Minority, Women, or Disadvantaged Business Enterprise;

10. Making every effort to obtain Minority, Women, or Disadvantaged Business Enterprise participation that could reasonably be expected to produce a level of participation sufficient to meet the goals of PWC; and

11. Providing interested minority, women, and disadvantaged businesses with information relative to project requirements.

I. Documenting Good-Faith Efforts

If the prime service provider does not meet the goals for MWDBE participation at the time the proposals are due, then the following documents indicating "good-faith efforts" should be submitted as a minimum:

1. A report of all proposals received by the prime service provider from MWDBE sub-providers must indicate the action taken by the prime service provider in response to the proposal. In cases where proposals have been rejected, the reason for rejection must be indicated.

2. Documentation of efforts to enter into agreements with MWDBEs for sub-provider work or arrangements for joint ventures, partnerships, or other multi-entity relationships. Also included should be a statement of why agreements or arrangements were not made.

3. Proof of contact with MWDBEs and associations or business development centers that disseminate information to MWDBEs.

4. A copy of emails or notices sent to groups in Section VI, J(3) above notifying them of the firm's intent to submit a qualification submittal to PWC. The emails or notices should indicate the areas of work available for sub-providers.

5. Description of assistance provided to MWDBEs in review of the qualification submittal and work to be done by the sub-provider.

6. Description on use made by firms of available resources such as directories of MWDBEs.

7. Documentation of advertisements sent to general circulation media, trade publications, and minority-focused media.

8. Proof of attendance at any pre-bid meeting.

If the prime service provider fails to meet the MWDBE goals with its proposed project team and cannot provide documentation of "good-faith efforts", these failures will be noted to the involved department by the MWDBE Program Staff, and the service provider may be disqualified.

VIII. UTILIZATION OF JOINT VENTURE

PWC is committed to promoting the utilization of joint venturing amongst business enterprises and to support, encourage, and offer procurement opportunities to support utilization when available so that business enterprises can meet capacity development.

The purpose of Joint Venturing is to connect high potential MWDBEs with a Prime Contractor that will supplement their growth and development. Joint Venturing is seen as an important approach to help MWDBEs compete for larger contracts. PWC conducts many outreach events to connect certified MWDBEs with PWC decision makers and prime contractors. PWC shall provide targeted outreach, training, and technical support

to MWDBEs and urge Prime contractors to provide an equivalent level of outreach and support when joint venturing is available. PWC's mission is to provide an innovative program to the industry that focuses on the accelerated growth of diverse partnerships.

IX. MWDBE REPORTING PROCEDURE

1. The MWDBE Program staff shall submit quarterly progress reports to PWC Departments. The quarterly progress reports shall be prepared by the MWDBE Program staff from information (i.e. pay applications, MWDBE forms, and requisition checklist form) submitted by each department involved in procurement within thirty (30) days following the period (each quarter). Progress reports shall indicate the type of procurement contract (i.e., construction, A&E, purchase, professional services, or general services) and shall include the following:

    vi. Number and dollar value of total procurement contracts;
    vii. Number and dollar value of all procurement contracts awarded to MWDBEs by the department;
    viii. Where goals are not met, the progress report shall specify the reasons and include recommendations for increasing participation.

2. PWC General Manager/CEO or its designee shall submit an annual report to Commission. The report shall include the total number of procurement contracts by departments and the dollar value of all contracts with MWDBE participation. The level of MWDBE participation shall be reported annually.

FAYETTEVILLE PUBLIC WORKS COMMISSION'S

MWDBE COMPLIANCE PROVISIONS

APPLICATION:

The requirements of Fayetteville Public Works Commission (PWC) Minority, Women, and Disadvantaged Business Enterprise (MWDBE) Program for participation specific contracts are hereby made part of the Contract Documents. Copies of the Program may be obtained from:

Fayetteville Public Works Commission
Economic Inclusion Programs
P.O. Box 1089
Fayetteville, North Carolina 28302
Phone (910) 223-4016 Fax (910) 483-1429
E-mail: EIProgram@faypwc.com

NCDOT DBE Directory: www.ebs.nc.gov/VendorDirectory
HUB Directory: https://ncadmin.nc.gov/businesses/hub

MWDBE Compliance Requirements:

1. The Bidder shall provide, with their Bid Form, at the time bids are due, the documents set forth below, properly executed. Returning executed copies indicates and establishes that the Bidder understands and agrees to any incorporated MWDBE contract provisions.

2. All Bidders must provide with their Bid Form, at the time bids are due, a properly completed and executed copy of **either:**

   - Affidavit A – Listing of Good-Faith Efforts **OR**
   - *Affidavit B – Intent to Self-Perform with Own Workforce.

   *Affidavit B should **only** be used if the Contractor will perform **ALL Elements** of the Work on this project with their own forces **AND** will complete **ALL Elements** of this project **WITHOUT** the use of subcontractors, material suppliers, or providers of professional services.

3. Upon being identified as the apparent lowest responsive, responsible Bidder, a Bidder shall, within twenty-four (24) hours of PWC's notification provide a properly completed and executed copy of **either:**

   - Affidavit C – Percentage of MWDBE Participation **OR**
   - Affidavit D – Good-Faith Efforts.

4. All Bidders must provide with their Bid Form, at the time bids are due, a properly completed and executed copy of Affidavit E- Identification of MWDBE/Local Participation Form

All written statements, certifications, or intentions made by the Bidder shall become a part of the agreement between the Contractor and Fayetteville Public Works Commission for performance of this contract.

SUBCONTRACTOR PAYMENT REQUIREMENTS:

North Carolina General Statutes 143-134.1 (N.C.G.S.) states that the percentage of retainage on payments made by the prime contractor to the subcontractor shall not exceed the percentage of retainage on payments made by the Fayetteville Public Works Commission to the prime contractor. Failure to comply with this provision shall be considered a breach of the contract, and the contract may be terminated in accordance with the termination provisions of the contract.

The Contractor shall provide an itemized statement of payments to each MWDBE subcontractor before final payment is processed.

The Contractor shall provide an itemized statement of payments to each NON-MWDBE subcontractor before final payment is processed.

_____
Contractor

_____
Signature

_____,_____
Printed Name Title

_____
Date

Affidavit A: Listing of the Good Faith Efforts

Affidavit of _____
(Name of Bidder)

I have made a good faith effort to comply under the following areas checked:

Total Available GFE Points: ***155***		*Minimum Number GFE Points* ***Required****:* ***50***
Points		
	10	Contacting minority businesses that reasonably could have been expected to submit a quote and that were known to the contractor or available on State or local government-maintained lists at least 10 days before the bid or proposal date and notifying them of the nature and scope of the work to be performed.
	10	Making the construction plans, specifications and requirements available for review by prospective minority businesses or providing these documents to them at least 10 days before the bid or proposals are due.
	15	Breaking down or combining elements of work into economically feasible units to facilitate minority participation.
	10	Working with minority trade, community, or contractor organizations identified by the Office for Historically Underutilized Businesses and included in the bid documents that provide assistance in recruitment of minority businesses.
	10	Attending any pre-bid meetings scheduled by the public owner.
	20	Providing assistance in getting required bonding or insurance or providing alternatives to bonding or insurance for subcontractors.
	15	Negotiating in good faith with interested minority businesses and not rejecting them as unqualified without sound reasons based on their capabilities. Any rejection of a minority business based on lack of qualification should have the reasons documented in writing.
	25	Providing assistance to an otherwise qualified minority business in need of equipment, loan capital, lines of credit, or joint pay agreements to secure loans, supplies, or letters of credit, including waiving credit that is ordinarily required. Assisting minority businesses in obtaining the same unit pricing with the bidder's suppliers in order to help minority businesses in establishing credit.
	20	Negotiating joint venture and partnership arrangements with minority businesses in order to increase opportunities for minority business participation on a public construction or repair project when possible.
	20	Providing quick pay agreements and policies to enable minority contractors and suppliers to meet cash-flow demands.
Total GFE Points (Claimed by Bidder):		***Total GFE Points (Assessed by PWC):***

In accordance with NCGS 143-128.2(d) the undersigned will enter into a formal agreement with the firms listed in the Identification of Small Disadvantaged Business Participation schedule conditional upon execution of a contract with the Owner. Failure to abide by any applicable statutory provision may constitute a breach of the contract. The undersigned hereby certifies that he or she has read the terms of the MWDBE business commitment and is authorized to bind the Bidder to the commitment herein set forth.

Date:_____Name of Authorized Officer: _____

SEAL

State of _____, County of _____

Subscribed and sworn to before me this _____day of 20___

Notary Public _____

My commission expires _____

Last Revised September 24, 2024

Affidavit B: Intent to Perform Contract with Own Workforce

Affidavit of _____
(Name of Bidder)

I hereby certify that it is our intent to perform 100% of the work required for contract:

_____
(Name of Project)

In making this certification, the Bidder states that the Bidder does not customarily subcontract elements of this type project, and normally performs and has the capability to perform and will perform **all elements of the work** on this project with his/her own current workforces; and will complete all elements of this project **without** the use of subcontractors, material suppliers, or providers of professional services.

The Bidder agrees to provide any additional information or documentation requested by the Owner in support of the above statement.

The undersigned hereby certifies that he or she has read this certification and is authorized to bind the Bidder to the commitments herein contained.

Date:_____Name of Authorized Officer: _____

SEAL

State of _____, County of _____

Subscribed and sworn to before me this _____day of 20___

Notary Public _____

My commission expires _____

Affidavit C: Percentage of MWDBE Participation

Affidavit of _____
(Name of Bidder)

I hereby certify that on contract: _____
(Name of Project)

$_____
(Dollar Amount of Total Bid)

I will expend a minimum of _____% of the total dollar amount of the contract with Minority, Women, and Disadvantaged Business Enterprises (MWDBE). MWDBEs will be employed as subcontractors, vendors, or providers of professional services. Such work will be subcontracted to the following firms listed below.

Name, Address, & Phone No.	EIN	*MWDBE Category	NAICS	Dollar Value	% of Contract

*MWDBE categories: Black-African Americans (B), Hispanic-Americans (H), Asian- Americans (A), Native-Americans (I), Women (F), Socially/Economically Disadvantaged (D)

Pursuant to NCGS 143-128.2(d), the undersigned will enter into a formal agreement with MWDBEs for work listed in this schedule conditional upon execution of a contract with the Owner. Failure to fulfill this commitment may constitute a breach of the contract.

The undersigned hereby certifies that he or she has read the terms of this commitment and is authorized to bind the Bidder to the commitment herein set forth.

Date:_____Name of Authorized Officer: _____

SEAL

State of _____, County of _____

Subscribed and sworn to before me this _____day of 20___
Notary Public _____

My commission expires _____

Affidavit D: Good Faith Efforts

If Owner determines using reasonable discretion that Affidavit C is insufficient, Bidder agrees to provide the following information regarding any good-faith efforts.

Name, Address, & Phone No.	EIN	*MWDBE Category	NAICS	Dollar Value

*MWDBE categories: Black-African Americans (B), Hispanic-Americans (H), Asian- Americans (A), Native-Americans (I), Women (F), Socially/Economically Disadvantaged (D)

Bidder may be requested to provide documentation of the Bidder's good-faith efforts. Examples of documentation may include the following:

a. Copies of solicitations for quotes to MWDBEs. Each solicitation may include a specific description of the work to be subcontracted, location where bid documents can be reviewed, representative of the Prime Bidder to contact, and location, date and time when quotes must be received.
b. Copies of quotes or responses received from each firm responding to the solicitation.
c. A telephone log of follow-up calls to each firm sent a solicitation.
d. For subcontracts where a MWDBE is not considered the lowest responsible sub- bidder, copies of quotes received from all firms submitting quotes for that particular subcontract.
e. Documentation of any contacts or correspondence to MWDBE, community or contractor organizations in an attempt to meet the goal.
f. Copy of pre-bid roster.
g. Letter documenting efforts to provide assistance in obtaining required bonding or insurance for MWDBEs.
h. Letter detailing reasons for rejection of a MWDBE due to lack of qualification.
i. Letter documenting proposed assistance offered to MWDBEs in need of equipment, loan capital, lines of credit, or joint pay agreements to secure loans, supplies, or letter of credit, including waiving credit that is ordinarily required.

Failure to provide the documentation as listed in these provisions may result in rejection of the bid and award to the next lowest responsible and responsive Bidder.

Date:_____Name of Authorized Officer: _____

SEAL

State of _____, County of _____

Subscribed and sworn to before me this _____day of 20___

Notary Public _____

My commission expires _____

Last Revised September 24, 2024

Affidavit E: Identification of MWDBE/Local Participation

_____
(Name of Bidder)

I hereby certify that on contract: _____
(Name of Project)

We will use the following Minority, Women, and Disadvantaged Business Enterprises (MWDBE), and Local (Cumberland, Hoke, Harnett County) as construction subcontractors, vendors, suppliers, or providers of professional services.

Name, Address, & Phone No.	**EIN**	***MWDBE Category / **Local**	**NAICS**	**Dollar Value**

*MWDBE categories: Black-African Americans (B), Hispanic-Americans (H), Asian- Americans (A), Native-Americans (I), Women (F), Socially/Economically Disadvantaged (D)

**Local: Fayetteville Metropolitan Statistical Area (MSA) comprising of Cumberland County, Hoke County, and Harnett County. PWC is requesting this information for reporting purposes only, and use of local entities will not be considered for compliance with the requirements of the MWDBE Program.

The total value of MWDBE/local business contracting will be $_____

Date:_____Name of Authorized Officer: _____

SEAL

State of _____, County of _____
Subscribed and sworn to before me this _____day of 20___
Notary Public _____
My commission expires _____

FAYETTEVILLE PUBLIC WORKS COMMISSION
MWDBE ADD / CHANGE FORM

If a MWDBE subcontractor fails to complete work under the subcontract for any reason, the recipient must require the prime contractor to employ the good faith efforts set forth in the MWDBE Program if soliciting a replacement or additional subcontractor.

For MWDBE Change Request, please provide all information below:

Prime Contractor: _____

Subcontracted Work: _____

Previous Subcontractor: _____

Reason this for change request:

_____

New Subcontractor: _____

EIN:_____

MWDBE Category: _____

To Add MWDBE Subcontractor/Subcontracted work:

If this is a new trade being subcontracted or a subcontractor that was not documented in the original Project Bid Information submittal, then good faith efforts to solicit a MWDBE must be documented, as the original MWDBE instructions indicate. Please provide all good faith efforts below showing all the MWDBE firms contacted to perform this work along with any additional good faith efforts or evidence that there are not reasonably available firms in the work area. PWC's MWDBE Program requires that good faith efforts are to be carried out to the fullest extent practicable. If solicitations were not carried out due to being impracticable, please attach this explanation to this form.

Name, Address, & Contact Information	EIN	MBE or WBE and Certifying agency	How was this firm contacted (email, letter, or Phone) and what was the result of the solicitation? *

*Must submit copies of emails or letters. If phone calls were made this sheet can serve as documentation of calls

Date:_____Name of Authorized Officer: _____

SEAL

State of _____, County of _____

Subscribed and sworn to before me this _____day of 20___

Notary Public _____

My commission expires _____

Last Revised September 24, 2024

SMALL LOCAL SUPPLIER / MWDBE SUBCONTRACTOR DISCLOSURE FORM

Contractor: _____
Address & Phone: _____
Project: _____
Name: _____
Pay Application # _____

Please complete the below form by providing the necessary information for the payments made to each subcontractor, vendor, or supplier for the work associated with the identified pay application. This form must be fully completed and attached to each pay application.

Firm Name, Address, and Contact Information	Payment Amount	Type of Work/Commodity (Include NAICS Code)

_____
Signature

_____, _____
Printed Name Title

_____
Date

SECTION B - CONTRACT EXECUTION DOCUMENTS

*** THIS PAGE WAS INTENTIONALLY LEFT BLANK ***

NOTICE OF AWARD

TO: _____
_____
_____

PROJECT DESCRIPTION: **PWC2526023 – WATER MAIN REPLACEMENT AND REHABILITATION**

The OWNER has considered the BID submitted by you for the above described work in response to its Advertisement for Bids dated _____ and Instructions to Bidders.

You are hereby notified that your BID has been accepted for items in the amount of $_____.

You are required by the Instructions to Bidders to execute the Agreement and furnish the required Performance Bond, Payment Bond, and Certificates of Insurance within ten (10) calendar days from the date of this NOTICE to you.

If you fail to execute said Agreement and to furnish said Bonds within ten (10) days from the date of this Notice, said Owner will be entitled to consider all your rights arising out of the OWNER's acceptance of your BID as abandoned and as a forfeiture of your Bid Bond. The Owner will be entitled to such other rights as may be granted by law.

You are required to return an acknowledged copy of this NOTICE OF AWARD to the OWNER.

Dated this _____day of _____, 2025.

OWNER: **FAYETTEVILLE PUBLIC WORKS COMMISSION**
FAYETTEVILLE, NC

BY: Nikole Bohannon
TITLE: Procurement Manager

ACCEPTANCE OF AWARD

PWC2526023– WATER MAIN REPLACEMENT AND REHABILITATION

Receipt of the preceding NOTICE OF AWARD is hereby acknowledged this the _____ day of _____, 2025.

(CONTRACTOR)

By:_____

Title:_____

- END OF SECTION -

State of North Carolina
Cumberland County

ON-CALL CONSTRUCTION AGREEMENT

THIS ON-CALL CONSTRUCTION AGREEMENT ("Agreement" or "Contract") is made by and between Fayetteville Public Works Commission ("PWC"), a North Carolina public authority, [PER OUR CHARTER (SEE SEC 6A.20), THE CONSTRUCTION CONTRACT, IF MORE THAN $500K, MUST BE BETWEEN THE CITY (BY AND THROUGH PWC) AND THE CONTRACTOR], and _____ ("Contractor"), a North Carolina _____ (each of PWC and Contractor is referred to herein as a "Party" and collectively as the "Parties") as of the date of execution last written below (the "Effective Date"). For good and valuable consideration, the receipt and sufficiency of which is hereby acknowledged, the Parties agree as follows:

RECITALS

PWC requires the services of a _____ to provide will provide timely, cost-effective and quality on-call construction and repair services for various projects which can be small in scope and usually immediate in terms of need. Individual On-Call Requests dollar values and completion times will vary depending on the type and amount of work assigned and the rate at which appropriated of funds are consumed. The availability of the Contractor and its response times are of the utmost importance.

1. Scope of Services. The following is a general description of the tasks that may be required by PWC pursuant to this Agreement. The list is not intended to be all-inclusive, nor is it guaranteed that all of the listed tasks will be assigned.

_____
_____
_____

Upon receipt of a "Notice to Proceed", Contractor agrees to perform the Authorized Work requested and authorized by PWC pursuant to an On-Call Request. For purposes of this Agreement, an "On-Call Request" means an independent, specific, written work assignment issued to Contractor by PWC outlining a detailed scope of Services to be performed, including some or all of the above-described tasks, applicable timelines, and any other relevant specifications.

Contractor shall furnish and bear solely the entire cost of all labor and materials to perform the Work in a workmanlike manner in strict accordance with the Contract Documents, schedule delivery of the new materials, furnish and bear solely the entire cost of all supervision, contract administration, equipment, tools, and other means necessary to complete the Work, perform every obligation imposed by the Contract Documents, and be solely responsible for the clean-up and disposal of all materials and debris relating to or arising from the construction and renovation, subject to any exceptions that are specifically set forth in the Contract Documents. Except as otherwise specifically provided in the Contract Documents, Contractor is solely responsible for all construction means, methods, techniques, sequences, procedures, safety precautions or programs, supervising, coordinating, and performing the tasks necessary to complete the Work; provided, however, PWC shall have the right, without incurring any liability to Contractor, to suspend Contractor's performance when a PWC employee, in his or her opinion, observes a safety violation involving a threat to life or imminent danger of bodily injury,

SAMPLE

and the suspension shall remain in effect until Contractor remedies the safety violation.

2. Definitions. Capitalized terms used in this Agreement have the meaning specified below:

"Authorized Work" means the specific work requested and authorized pursuant to an On-Call Request.

"Business Day" means each calendar day that is not a Saturday, Sunday, holiday observed by the federal government for its employees, or holiday observed by PWC for its employees.

"Completion of the Authorized Work" means: (i) the Authorized Work is completed in accordance with this Agreement, except for punch list items; (ii) PWC has received any required temporary or final certificate of occupancy from the governmental agency with jurisdiction over the Authorized Work; and (iii) the registered architects or engineers (the "Designer(s)") who designed portions or components of the Authorized Work have issued certificates of Completion of the Authorized Work as to those portions or components.

"Contract Documents" means the following documents that were either made available to Contractor by PWC during the bid solicitation process (including Drawings) or executed by the Parties or both, which are all incorporated by reference herein:

a. This Agreement
b. Bid Documents
c. Contractor's Submitted Bid
d. Bid Bond
e. Form of Exceptions
f. Notice of Award
g. Acceptance of Award
h. Performance Bond
i. Payment Bond
j. Copy of General Contractor's License
k. Certificate of Insurance
l. Technical Specifications
m. Additional Specifications

The following documents may be delivered or issued on or after the Effective Date of the Agreement and may not be attached to this Agreement, but are considered Contract Documents when executed by the Parties:

n. On-Call Request and Notice to Proceed
o. Authorized Work Change Directive(s)
p. Change Order(s)
q. Field Order(s)

SAMPLE

There are no Contract Documents other than those identified in this Agreement. The Contract Documents may only be amended, modified, or supplemented as provided in this Agreement in a writing signed by the Parties.

"Fault" means a breach of contract by Contractor, negligent, reckless, or intentional act(s) or omission(s) constituting a tort under applicable statutes or common law by one or more Responsible Persons, or violation(s) of applicable statute(s) or regulation(s) by a Responsible Person.

"Responsible Person" means Contractor and each of its employees, agents, representatives, subcontractors, or other persons and entities for which Contractor may be liable or responsible as a result of any statutory, tort, or contractual duty.

"Work" means all Authorized Work, collectively.

The terms used in this Agreement shall have the meaning as stated herein and in the Contract Documents. In the event of a conflict between the terms of this Agreement and any other component(s) of the Contract Documents, the terms of this Agreement shall govern.

3. Contract Prices. On-Call Requests will be issued individually on a "not to exceed" basis. Authorized Work shall be billed based on the hourly rates set forth on Exhibit A, attached hereto and made a part hereof by this reference. PWC shall pay Contractor for Completion of the Authorized Work in accordance with the Contract Documents the amount identified in the applicable On-Call Request (the "Price"). Contractor understands and acknowledges that the Price is derived from a specific appropriation of funds provided for the Work. Contractor agrees and acknowledges the Price is equal to the aggregate cost of all Authorized Work to be done pursuant to the applicable On-Call Request, including all labor, materials, equipment, apparatus, and supplies. Contractor acknowledges and agrees that there is no guarantee that the amount appropriated will be fully expended.

4. Term. The initial term of this Contract shall be for two (2) years commencing on the Effective Date (the "Initial Term"); provided, however, that PWC may terminate this Contract for convenience at any time following the expiration of the first year of the Initial Term by giving the Contractor written notice of termination. At the expiration of the Initial Term, this Contract will automatically renew for an additional one (1) year period unless a Party provides the other Party with notice of its intent not to renew this Agreement at least ninety (90) days prior to the expiration of the Initial Term.

The duration of the Authorized Work shall be as set forth in the applicable On-Call Request issued under this Contract, which shall be attached hereto and made an integral part hereof. The Parties shall perform their obligations under this Agreement in compliance with all scheduling deadlines set forth in the On-Call Request. Contractor shall commence the Authorized Work on the date to be specified in the Notice to Proceed issued by PWC. Contractor shall achieve Completion of the Authorized Work on the date specified in the On-Call Request, plus any modifications thereof allowed in accordance with the Contract Documents (the "Completion Date").

5. Payment. PWC shall pay Contractor in installment payments plus a final payment, as set forth in the Contract Documents. For each applicable installment payment, Contractor shall submit an application for payment in accordance with the Contract Documents. An application for payment will be processed by PWC as provided in the Contract Documents.

SAMPLE

Such installment payments shall reflect the actual cost of the Authorized Work, not to exceed in total the Price, and the allocable portion of the total Price for said installment. PWC shall make payment to Contractor, less any applicable retainage set forth in the Contract Documents; provided, however, that PWC may withhold all or a portion of a payment on account of (1) incomplete Authorized Work, (2) defective or nonconforming Authorized Work, (3) claims filed or a reasonable basis to believe that such claims will be filed imminently, (4) failure of Contractor to make payments properly for labor, services, materials, equipment or subcontracts, (5) damages caused to PWC or another party by one or more Responsible Persons, or (6) failure to comply with the terms and conditions of this Agreement. In the final payment, PWC shall pay the balance of the Price, including all retained amounts, less any Liquidated Damages and other applicable damage and claim amounts, to Contractor within forty-five (45) days of Completion of the Authorized Work; provided, however, that PWC may withhold a reasonable sum from the final payment to ensure correction of any final items or condition of the Authorized Work.

6. Retainage. Subject to any restrictions applicable to any federal grant funds that may be utilized for the Authorized Work, PWC may, in its discretion, retain up to five percent (5%) of any periodic payment due Contractor; provided, however, when the Authorized Work is fifty percent (50%) complete, PWC, with written consent of the surety, shall not retain any further retainage from periodic payments due Contractor if Contractor continues to perform satisfactorily and any nonconforming Authorized Work identified in writing prior to that time by PWC or the Designer has been corrected by Contractor and accepted by PWC or the Designer, and provided further that full payment, less authorized deductions, shall also be made for those line item trades that have reached one hundred percent (100%) completion of their contract obligations by or before the Authorized Work is fifty percent (50%) complete if Contractor has performed satisfactorily in accordance with G.S. 143-134.1(b2), contingent upon PWC's receipt of an approval or certification from the Designer that the Authorized Work performed by the subcontractor is acceptable and in accordance with the Contract Documents. If PWC determines Contractor's performance is unsatisfactory, PWC may, in its discretion, reinstate retainage for each subsequent periodic application for payment as authorized in this Section up to the maximum amount of five percent (5%). The Authorized Work shall be deemed fifty percent (50%) complete when Contractor's gross project invoices, excluding the value of materials stored off-site, equal or exceed fifty percent (50%) of the Price, except the value of materials stored on-site shall not exceed twenty percent (20%) of Contractor's gross project invoices for the purpose of determining whether the Authorized Work is fifty percent (50%) complete. Within 60 days after the submission of a pay request and one of the following occurs, as specified in the Contract Documents, PWC, with written consent of the surety, shall release to Contractor all retainage on payments held by PWC: (i) PWC receives a certificate of substantial completion from the Designer in charge of the Authorized Work; or (ii) PWC receives beneficial occupancy or use of the Authorized Work; provided, however, PWC may in its discretion retain sufficient funds to secure Completion of the Authorized Work or corrections and punch list items on any Authorized Work. If PWC retains funds, the amount retained shall not exceed two and one-half times the estimated value of the Authorized Work to be completed or corrected or addressed in the punch list. Any reduction in the amount of the retainage on payments shall be with the consent of Contractor's surety. The existence of any third-party claims against Contractor or any additive change orders to the Construction Documents shall not be a basis for delaying the release of any retainage on payments. Notwithstanding anything in this Section to the contrary, following fifty percent (50%) completion of the Authorized Work, PWC shall be authorized to withhold additional retainage from a subsequent periodic payment, not to exceed five percent (5%), in order to allow PWC to retain two and one-half percent (2.5%) total retainage through the Completion of the Authorized Work. In the event that PWC elects to withhold additional retainage on any periodic payment subsequent to release of retainage on a

SAMPLE

line-item of Authorized Work pursuant to G.S. 143-134.1(b2), Contractor may also withhold from the subcontractors remaining on the project sufficient retainage to offset the additional retainage held by PWC, notwithstanding the actual percentage of retainage withheld by PWC of the Authorized Work as a whole. Neither PWC's nor Contractor's release of retainage on payments as part of a payment in full on a line-item of Authorized Work pursuant to G.S. 143-134.1(b2) shall affect any applicable warranties on Authorized Work done by Contractor or subcontractor, and the warranties shall not begin to run any earlier than either PWC's receipt of a certificate of substantial completion from the Designer in charge of the Authorized Work or PWC receives beneficial occupancy.

7. Liquidated Damages. Time is of the essence with respect to performance of each of the Parties' obligations under this Agreement. Contractor recognizes and acknowledges that PWC will suffer financial and other losses if the Authorized Work is not completed by its Completion Date. The Parties recognize and agree that the delays, expense, and difficulties involved in proving in a legal or arbitration proceeding the actual loss suffered by PWC if the Authorized Work is not completed by the Completion Date. Accordingly, instead of requiring any such proof, Contractor and PWC agree that in the event Contractor fails to achieve Completion of the Authorized Work by its Completion Date, Contractor shall pay to PWC as liquidated damages to compensate PWC for damages related to the delayed Completion of the Authorized Work one thousand dollars ($1000.00) per day ("Liquidated Damages") for each calendar day Contractor fails to achieve Completion of the Authorized Work by the Completion Date.

PWC and Contractor acknowledge and agree that the sums payable under this Section 7 shall constitute liquidated damages and not penalties and are in addition to all other rights of PWC, including the right to call a default. The parties further acknowledge that (i) the amount of loss or damages likely to be incurred is incapable or is difficult to precisely estimate, (ii) the amounts specified bear a reasonable relationship to, and are not plainly or grossly disproportionate to, the probable loss likely to be incurred in connection with Contractor's failure fails to achieve Completion of the Authorized Work, (iii) one of the reasons for PWC and Contractor reaching an agreement as to such amounts was the uncertainty and cost of litigation regarding the question of actual damages, and (iv) PWC and Contractor are sophisticated business parties and have been represented by sophisticated and able legal counsel and negotiated this Agreement at arm's length.

8. Contractor's Representations and Warranties. In order to induce PWC to enter into this Agreement, Contractor makes the following representations and warranties to PWC which shall be true and correct on the Effective Date and on the date of issuance of each On-Call Request under this Contract:

a. Contractor is duly licensed in the State of North Carolina to complete the Work, is duly organized, validly existing and in good standing and has all requisite powers, rights, and authority to execute, enter into, and perform this Agreement in accordance with the terms and conditions of this Agreement, and this Agreement constitutes a legal, valid, and binding obligation of Contractor enforceable against it in accordance with its terms.

b. Contractor has read the Contract Documents, and acknowledges and understands all data, materials, specifications, and requirements identified in the Contract Documents.

SAMPLE

c. Contractor is familiar with and is satisfied as to all laws and regulations that may affect cost, progress, and performance to complete the Work.

d. Prior to undertaking any Authorized Work, Contractor shall have:

(i) visited the site for the Authorized Work, conducted a thorough, visual examination of the site and adjacent areas, and become familiar with and is satisfied as to the general, local, and site conditions that may affect cost, progress, and performance in completing the Authorized Work..

(ii) Contractor shall have carefully studied all: (1) reports of explorations and tests of subsurface conditions at or adjacent to the site and all drawings of physical conditions relating to existing surface or subsurface structures at the site that have been identified in the Contract Documents and any accompanying reports and drawings, and (2) reports and drawings relating to Hazardous Environmental Conditions, if any, at or adjacent to the site that have been identified in the Contract Documents and any accompanying reports and drawings.

(iii) Contractor shall have considered the information known to Contractor itself; information commonly known to contractors doing business in the locality of the site; information and observations obtained from visits to the site; the Contract Documents; and the site-related reports and drawings identified in the Contract Documents, if any, with respect to the effect of such information, observations, and documents on (1) the cost, progress, and performance of the Authorized Work; (2) the means, methods, techniques, sequences, and procedures of construction to be employed by Contractor; and (3) Contractor's safety precautions and programs.

(iv) Based on the information and observations referred to in subparagraph (iii) of this subsection d, Contractor shall have satisfied itself that no further examinations, investigations, explorations, tests, studies, or data are necessary for the performance of the Authorized Work at the applicable Price commencing on the commencement date set forth in the Notice to Proceed and in accordance with the other terms and conditions of the Contract.

(v) Contractor shall have made itself aware of the general nature of the Authorized Work to be performed by PWC and others at the site that as indicated in the Contract Documents.

e. Prior to undertaking any Work, Contractor shall have given PWC's Designer written notice of all conflicts, errors, ambiguities, or discrepancies that Contractor has discovered in the Contract Documents, and the written resolution thereof by the Designer is acceptable to Contractor.

f. The Contract Documents are generally sufficient to indicate and convey understanding of all terms and conditions for performance and furnishing of the Work.

g. Contractor's entry into this Agreement constitutes an incontrovertible

SAMPLE

representation by Contractor that, without exception, all prices in the Agreement are premised upon performing and furnishing the Work required by the Contract Documents.

h. Contractor has no business or personal relationship with any PWC Commissioner, officer, director, manager, or supervisor and Contractor covenants to disclose immediately to PWC any such relationship that develops during the performance of the Work.

9. Contractor's Payment Obligations. Contractor shall pay all of its obligations arising out of or in connection with the Work in a timely manner to all persons supplying materials in the prosecution of the Work and to all laborers and others employed thereon.

10. Performance and Payment Bonds. Contractor shall obtain and deliver to PWC a performance bond in an amount based on the estimated cost of the Authorized Work, conditioned upon the faithful performance of all Authorized Work in accordance with the Contract Documents, which bond shall be solely for the protection of PWC. Contractor shall obtain and deliver to PWC a payment bond in the amount of one hundred percent (100%) of the estimated cost of the Authorized Work, conditioned upon the prompt payment for all labor or materials for which Contractor or one or more of its subcontractors is liable, which payment bond shall be solely for the protection of the persons furnishing materials or performing labor for which Contractor is liable. The performance bond and the payment bond shall be executed by one or more surety companies legally authorized to do business in the State of North Carolina, shall become effective upon the awarding of the construction contract by PWC to Contractor, and shall at all times comply with the requirements set forth in Article 3 of North Carolina General Statutes Chapter 44A. In the event PWC deems the surety or sureties upon any bond necessary for this Agreement and the Completion of the Authorized Work, or if for any reason, such bond ceases to be adequate to cover the performance and/or payment of the Authorized Work, Contractor shall, at its expense, within five (5) days after the receipt of notice from PWC, furnish an additional bond or bonds in such form and amount, and with such surety or sureties as shall be satisfactory to PWC. In such event no further payment to Contractor shall be deemed to be due under this Agreement until new or additional security for the performance and payment of the Authorized Work shall be furnished in manner and form satisfactory to PWC. Contractor understands and acknowledges that PWC, as a public authority, is not subject to the provisions of Articles 1 and 2 of Chapter 44A of the General Statutes, in accordance with G.S. 44A-34 and applicable law.

11. Contractor's Damage Repair Obligations. Contractor shall be responsible for all damages to the property of the City of Fayetteville and of PWC that may result from the normal procedure of a Responsible Person's actions in the prosecution of the Work or that may be caused by or result from the negligence of a Responsible Person during the progress of or connected with the prosecution of the Work, whether within the limits of the Work or elsewhere. Contractor shall promptly restore all such property so damaged to a condition as good as it was immediately prior to Contractor initiating the Work .

12. Defective Work. The Project shall be subject to observation and approval by PWC, Designer, and representatives of governmental agencies with jurisdiction over the Project. PWC and Designer shall be entitled to enter at all reasonable times the premises subject to construction or renovation to inspect the Work performed by or on behalf of Contractor, provided that such entry and inspection does not materially interfere with the progress of construction. Contractor shall correct promptly, at no cost to PWC, all Work

SAMPLE

reasonably rejected by PWC or by its representatives. Should Contractor fail to correct rejected Work, PWC may, acting in its sole discretion, correct such Work and the Contractor shall pay PWC's actual costs of correction and any other applicable amounts identified in the Contract Documents.

13. As-Built Drawings. Contractor shall maintain during the progress of the Authorized Work as-built drawings indicating the current status of the Authorized Work as actually performed. Upon Completion of the Authorized Work, Contractor shall prepare a final version of such as-built drawings and submit them to PWC for approval.

14. Assignment. This Agreement shall be binding upon and inure to the benefit of the Parties, their legal representatives, successors, and assigns. Contractor may not assign, transfer, convey, or encumber, whether voluntarily or by operation of law, this Agreement or any obligations, rights under, or interests in this Agreement to a third party without the prior written consent of PWC; and, specifically, but without limitation, money that may become due and money that is due may not be assigned without such consent (except to the extent that the effect of this restriction may be limited by law), and unless specifically stated to the contrary in any written consent to an assignment, no assignment will release or discharge the assignor from any duty or responsibility under the Contract Documents.

15. Indemnity. Contractor shall indemnify, defend, and hold harmless PWC and its Commissioners, officers, employees, agents, and representatives and the City of Fayetteville and its elected officials, managers, employees, agents, and representatives and Design Engineer (collectively "Indemnitees") from and against all claims, actions, liabilities, damages, losses, costs, and expenses (including, without limitation, injury to or death of any persons and damage to property, economic and consequential damages and attorneys' fees) asserted by one or more third parties against one or more of the Indemnitees if the Fault of one or more Responsible Persons is a proximate cause of the loss, damage, or expense indemnified. Contractor's obligation to indemnify, defend, and hold harmless the Indemnitees shall survive the termination of this Agreement.

16. Insurance. Contractor shall maintain during the performance of the Work and for at least three (3) years after the Completion of the Work the insurance coverage set forth in the Contract Documents, which insurance shall be placed with insurance companies authorized to do business in the State of North Carolina and rated A minus VII or better by the current edition of Best's Key Rating Guide or otherwise approved in writing by PWC. Prior to initiating any Work , Contractor shall deliver certificates of insurance confirming each such coverage required by the Contract Documents, and Contractor shall direct its insurers to provide annually to PWC certificates confirming each such coverage during the coverage period. PWC shall be named as an additional insured in the comprehensive automobile and commercial liability insurance policies. Commercial general liability coverage shall be written on an "occurrence" basis. Contractor shall not reduce or allow the required insurance coverages to lapse without PWC's prior written approval. All policies for insurance must be endorsed to contain a provision giving PWC a thirty (30) calendar day prior written notice by certified mail of any cancellation of that policy or material reduction in coverage. Should a notice of cancellation be issued for non-payment of premiums or any part thereof, or should Contractor fail to provide and maintain certificates as set forth herein, PWC shall have the right, but shall not have the obligation, to pay such premium to the insurance company or to obtain such coverage and to deduct such payment from any sums that may be due or become due to Contractor, or to seek reimbursement for said payments from Contractor. Any such sums paid by PWC shall be due and payable immediately by Contractor upon notice from PWC. The insurance provisions of this

SAMPLE

Agreement shall not be construed as a limitation on Contractor's responsibilities and liabilities pursuant to the terms and conditions of this Agreement. Contractor's obligation to maintain insurance for three (3) years after Completion of the Work shall survive the termination of this Agreement.

17. Warranty. Contractor hereby grants to PWC warranties on all materials and Workmanship involved in the Work for a period of one (1) year from the date of Completion of the Authorized Work and a period of two (2) years from the date of Completion of the Authorized Work for any latent structural defects. PWC shall give written notice to Contractor of any claim under this Section within the time specified hereinabove. These warranties shall be in addition to, and not in derogation of, all other rights and privileges which PWC may have under law, equity, or instrument, and shall survive the date of Completion of the Authorized Work and the final settlement and shall be binding on Contractor notwithstanding any provision in any other writing executed by PWC heretofore or contemporaneous with the execution of the Agreement or prior to the date of Completion of the Authorized Work.

18. Waiver. No failure on the part of any party to exercise, and no delay in exercising, any right, power, or privilege hereunder shall operate as a waiver thereof, nor shall any single or partial exercise of any right hereunder preclude any other or further cumulative and not exclusive of any remedies provided by law. This Agreement shall be binding upon and inure to the benefit of the parties, their legal representatives, successors, and assigns. This Agreement may not be assigned, transferred, conveyed, or encumbered, whether voluntarily or by operation of law, by either party without the prior written consent of the other party, which consent shall not be unreasonably withheld.

19. Law. THIS AGREEMENT SHALL BE GOVERNED BY AND INTERPRETED AND ENFORCED IN ACCORDANCE WITH THE LAWS OF THE STATE OF NORTH CAROLINA WITHOUT GIVING EFFECT TO THE CHOICE OF LAW PROVISIONS THEREOF. Contractor shall at all times comply with all applicable Federal, state, and local laws and building codes in the performance of its obligations under the Agreement.

20. Dispute Resolution. In the event of any dispute, controversy, or claim of any kind or nature arising under or in connection with this Agreement (a "Dispute") and involving any two or more of the following parties, PWC, Designer, Contractor or any subcontractor of Contractor, the party initiating the Dispute shall serve written notice of a Dispute on the party(ies) to the dispute, and those parties shall endeavor to settle the dispute first through direct, informal discussions between the parties' selected representatives. Any such representative(s) shall have binding authority to settle the Dispute. In the event the parties do not settle the Dispute within ten (10) days from the date of written notice of the Dispute, any party to the Dispute may, by written notice to the other party(ies), engage a mediator certified under the laws of the State of North Carolina to mediate the Dispute within thirty (30) days of such notice. The parties to the Dispute shall attend mediation in good faith. In the event mediation is unsuccessful, any party to the dispute may initiate arbitration proceedings. Any controversy or claim arising out of or relating to the Contract Documents, or the breach thereof, shall be settled by binding arbitration administered by the American Arbitration Association under its Construction Industry Arbitration Rules, and judgment on the award rendered by the arbitrator(s) may be entered in any court having jurisdiction thereof. All of the foregoing dispute resolution procedures shall be held in Cumberland County, North Carolina. The costs of the mediator and arbitrator in a dispute resolution process shall be divided equally among the parties to the process; provided, however, PWC shall bear at least one-third of the cost if PWC is a party to the dispute resolution and the remainder of the cost shall be divided equally among the other parties participating in

SAMPLE

the dispute resolution. PWC shall, in its contractual arrangements with Designer, and Contractor shall, in its contracts with subcontractors and they in their contracts with lower-tier subcontractors authorize and direct such parties to participate in the dispute resolution procedures set forth in this Section. Unless otherwise directed in writing by PWC, Contractor shall continue the Work and maintain compliance with the scheduling deadlines set forth in the Contract Documents during any dispute resolution proceedings. If Contractor continues to perform, PWC shall make payments due for the continued performance in accordance with this Agreement. The provisions of this Section shall not extend any applicable statutes of limitation or repose.

21. Execution; Modification; Entire Agreement; Severability. This Agreement may be executed in counterparts with the same effect as if the signatures to each counterpart were upon a single instrument, and all such counterparts together shall be deemed an original of this Agreement. For purposes of this Agreement, a facsimile copy or scanned copy or photocopy of a party's signature shall be sufficient to bind such party. This Agreement shall be subject to execution by electronic means in accordance with Article 40 of Chapter 66 of the North Carolina General Statutes. No oral communication, promise, understanding, or agreement before, contemporaneous with, or after the execution of this Agreement shall affect or modify any of the terms and conditions and obligations of the Contract Documents. The Contract Documents shall be modified only by a subsequent writing signed by both Parties. The Contract Documents shall be conclusively considered to contain and express all the terms and conditions agreed upon by the Parties, notwithstanding any prior or contemporaneous written communication, promise, understanding or agreement. Should any provision of this Agreement or any of the Contract Documents at any time be in conflict with any law, statute, rule, regulation, order, or ruling and thus be unenforceable, or be unenforceable for any other reason, then the remaining provisions of this Agreement shall remain in full force and effect and the court or arbitrator shall give the offending provision the fullest meaning and effect permitted by law. The titles of the Sections throughout this Agreement are for convenience only and the words contained therein shall in no way be held to explain, modify, amplify or aid in the interpretation, construction, or meaning of the provisions of this instrument.

22. Notices. Any notice which either Party is required or desires to give the other hereunder shall be deemed sufficiently given if, in writing, it is delivered personally, or sent by certified U.S. mail, return-receipt requested, postage prepaid, to the addresses listed herein below, or such other address as either Party shall give to the other Party by written notice in accordance herewith. Any notice given herein by personal delivery shall be deemed delivered when received. Any properly addressed notice given herein by certified mail shall be deemed delivered on third Business Day after the same is deposited in an official United States Post Office, postage prepaid, or if sooner upon the date when the return receipt therefore is signed, or refusal to accept the mailing by the addressee is noted thereon by the postal authorities.

To PWC:
Fayetteville Public Works Commission
Attn: Timothy Bryant, CEO/General Manager
PO Box 1089
Fayetteville, NC 28302

To Contractor:

SAMPLE

23. Termination. In addition to any other termination rights of PWC set forth in this Agreement, PWC may terminate this Agreement immediately if during the progress of any Authorized Work or during any warranty period, Contractor:

a. Persistently fails to prosecute Authorized Work properly and in accordance with this Contract, including but not limited to include failure to provide sufficient crews, equipment, or resources, or failure to adhere to the schedule;

b. Demonstrates disregard for the policies, procedures, or requirements of PWC;

c. Demonstrates complete disregard of the authority of PWC or its designated representatives; or

d. Violates in any substantial way the provisions and requirements of this Agreement.

Such termination shall be effective upon written notice to Contractor and its surety. PWC may terminate the contract for its convenience by providing Contractor at least seven (7) calendar days prior written notice, in which event Contractor shall be paid for all Authorized Work completed, plus other expenses as mutually agreed upon between PWC and Contractor.

24. Compliance with North Carolina and Federal Law. Contractor hereby acknowledges that "E-Verify" is the federal E- Verify program operated by the US Department of Homeland Security and other federal agencies which is used to verify the work authorization of newly hired employees pursuant to federal law and in accordance with Article 2, Chapter 64 of the North Carolina General Statutes. Contractor further acknowledges that all employers, as defined by Article 2, Chapter 64 of the North Carolina General Statutes, must use E-Verify and after hiring an employee to work in the United States, shall verify the work authorization of the employee through E-Verify in accordance with N.C.G.S. §64-26(a). Contractor hereby pledges, attests, and warrants through execution of this Agreement that Contractor complies with the requirements of Article 2, Chapter 64 of the North Carolina General Statutes and further pledges, attests, and warrants that all subcontractors currently employed by or subsequently hired by Contractor shall comply with all E-Verify requirements. Failure to comply with the above requirements shall be considered a breach of this Agreement. Contractor hereby further acknowledges that the execution and delivery of this Agreement constitutes Contractor's certification to PWC and to the North Carolina State Treasurer that, as of the date of the Effective Date of this Agreement, Contractor is not listed on (a) the Final Divestment List created and maintained by the North Carolina Department of State Treasurer pursuant to the Iran Divestment Act of 2015, Chapter 147, Article 6E of the General Statutes of North Carolina (the "Iran Divestment Act"); or (b) the list of companies that the North Carolina State Treasurer determines to be engaged in a boycott of Israel in accordance with Article 6G of Chapter 147 of the General Statutes of North Carolina. Contractor represents and warrants to Commission that Contractor, and all persons and entities owning (directly or indirectly) an ownership interest in it: (i) are not, and will not become, a person or entity with whom a party is restricted from doing business with under regulations of the Office of Foreign Asset Control ("OFAC") of the Department of the Treasury (including, but not limited to, those named on OFAC's Specially Designated and Blocked Persons list) or under any statute, executive order (including, but not limited to, the September 24, 2001, Executive Order 13224 Blocking Property and Prohibiting Transactions with Persons Who Commit, Threaten to Commit, or Support Terrorism), or other governmental action; and (ii) are not knowingly engaged in, and will not knowingly engage in,

SAMPLE

any dealings or transactions or be otherwise associated with such persons or entities described in clause (i) above. Contractor also shall at all times during the term of this Agreement comply with Executive Order 11246, , as amended by Executive Order 11375, “Amending Executive Order 11246 Relating to Equal Employment Opportunity,” and implementing regulations at 41 CFR part 60, “Office of Federal Contract Compliance Programs, Equal Employment Opportunity, Department of Labor,” including but not limited to the Equal Opportunity Clause requirements set forth in 41 C.F.R. § 60-1.4. Contractor shall abide by the requirements of 41 CFR 60–300.5(a) and 60–741.5(a) prohibiting discrimination against qualified individuals on the basis of protected veteran status or disability and requiring affirmative action by covered prime contractors and subcontractors to employ and advance in employment qualified protected veterans and individuals with disabilities.

IN WITNESS WHEREOF, the Parties have executed this Agreement by their duly authorized representatives as of the Effective Date.

Fayetteville Public Works Commission	[CONTRACTOR]
By:_____ Timothy Bryant, CEO/GM	By:_____ _____ (Printed Name, Title)
Date: _____	Date: _____

This instrument has been preaudited in the manner required by the Local Government Budget and Fiscal Control Act (N.C. Gen. Stat. § 159-1 et seq.).

By:_____
Rhonda Graham, Chief Financial Officer

Approved as to form:

_____
Legal Dept.

SAMPLE

EXHIBT A

Hourly Rates

SAMPLE

PERFORMANCE BOND

Date of Execution: _____

Name of Principal: _____

(Contractor)

Name of Surety: _____

Name of Contracting

Body: Fayetteville Public Works Commission, Fayetteville, N.C.

Amount of Bond: _____

PROJECT: PWC2526023 – WATER MAIN REPLACEMENT AND REHABILITATION

KNOW ALL MEN BY THESE PRESENTS, That We, the Principal and Surety above named, are held and firmly bound unto the above named Contracting Body, hereinafter called the Contracting Body, in the penal sum of the amount stated above the payment of which sum well and truly to be made, we bind ourselves, our heirs, executors, administrators, and successors, jointly and severally, firmly by these present.

THE CONDITION OF THIS OBLIGATION IS SUCH that whereas the Principal entered into a certain Contract with the Contracting Body, identified as shown above and hereto attached.

NOW, THEREFORE, if the Principal shall well and truly perform and fulfill all the undertakings, covenants, terms, conditions, and agreements of said Contract during the original term of said Contract and any extensions there of that may be granted by the Contracting Body, with or without notice to the Surety, and during the life of any Guaranty required under the Contract, and shall also well and truly perform and fulfill all the undertakings, covenants, terms, conditions, and agreements of any and all duly authorized modifications of said Contract that may hereafter be made, notice of which modifications to the Surety being hereby waived, then, this obligation to be void; otherwise to remain in full force and virtue.

IN WITNESS WHEREOF, the above bounded parties have executed this instrument under the several seals on the date indicated above, the name and corporate seal of each corporate party being hereto affixed, and these presents duly signed by its undersigned representative, pursuant to authority of its governing body.

Executed in _____ counterparts.

Witness:

(Proprietorship of Partnership)

By:

Title:

(Corporate Secretary or
Assistant Secretary, Only)

CONTRACTOR:

(Trade or Corporate Name)

By:

Title:

(Owner, Partner, Corporate President or
Vice-President, Only)
(CORPORATE SEAL)

Witness:

Countersigned:

(N.C. Licensed Resident Agent)

SURETY COMPANY:

(Surety Company Name)

By:

Title:

(Attorney in Fact)
(SURETY CORPORATE SEAL)

PAYMENT BOND

Date of Execution: _____

Name of Principal: _____

(Contractor)

Name of Surety: _____

Name of Contracting

Body: Fayetteville Public Works Commission, Fayetteville, N.C.

Amount of Bond: _____

PROJECT: **PWC2526023 – WATER MAIN REPLACEMENT AND REHABILITATION**

KNOW ALL MEN BY THESE PRESENTS, that We, the PRINCIPAL and Surety above named, are held and firmly bound unto the above named Contracting Body, hereinafter called the Contracting Body, in the penal sum of the amount stated above the payment of which sum well and truly to be made, we bind ourselves, our heirs, executors, administrators, and successors, jointly and severally, firmly by these presents.

THE CONDITION OF THIS OBLIGATION IS SUCH that whereas the Principal entered into a certain Contract with the Contracting Body, identified as shown above and hereto attached.

NOW THEREFORE, if the Principal shall promptly make payment to all persons supplying labor and material in the prosecution of the work provided for in said contract, and any and all duly authorized modifications of said contract that may hereafter be made, notice of which modifications to the Surety being hereby waived, then, this obligation to be void; otherwise to remain in full force and virtue.

IN WITNESS WHEREOF, the above bounded parties have executed this instrument under the several seals on the date indicated above, the name and corporate seal of each corporate party being hereto affixed, and these presents duly signed by its undersigned representative, pursuant to authority of its governing body.

Executed in _____ counterparts.

Witness:

_____
(Proprietorship of Partnership)

By:

_____
Title:

_____
(Corporate Secretary or
Assistant Secretary, Only)

CONTRACTOR:

_____
(Trade or Corporate Name)

By:

_____
Title:

_____
(Owner, Partner, Corporate President or
Vice-President, Only)
(CORPORATE SEAL)

Witness:

_____

Countersigned:

_____
(N.C. Licensed Resident Agent)

SURETY COMPANY:

_____
(Surety Company Name)

By:

_____
Title:

_____
(Attorney in Fact)
(SURETY CORPORATE SEAL)

POWER OF ATTORNEY
(ATTACH)

CERTIFICATE(S) OF INSURANCE
(Attach)

NOTICE TO PROCEED

TO: _____ Date: _____

PROJECT: **PWC2526023 – WATER MAIN REPLACEMENT AND REHABILITATION**

You are hereby notified to commence work in accordance with the Contract dated _____, 2025, on or before _____, 2025, and you are to complete the WORK within the **contract period** thereafter. The date of final completion therefore is _____.

FAYETTEVILLE PUBLIC WORKS COMMISSION

BY:_____

Nikole Bohannon

Procurement Manager

ACCEPTANCE OF NOTICE

Receipt of the above NOTICE TO PROCEED
is hereby acknowledged this the _____day of _____, 2025.

(CONTRACTOR)

BY:_____

TITLE:_____

- END OF SECTION –

GENERAL CONDITIONS FOR
FAYETTEVILLE PUBLIC WORKS COMMISSION

General Conditions 5
Article I. Definitions and Terminology 5
Section 1.01 Definitions 5
Section 1.02 Terminology 10
Article II. Preliminary Matters 11
Section 2.01 Delivery of Bonds and Evidence of Insurance 11
Section 2.02 Copies of Documents 11
Section 2.03 Before Starting any Work 12
Section 2.04 Preconstruction Conference; Designation of Authorized Representatives 12
Section 2.05 Initial Acceptance of Schedules 12
Section 2.06 Electronic Transmittals 13
Article III. Contract Documents: Intent, Requirements, Reuse 13
Section 3.01 Intent 13
Section 3.02 Reference Standards 13
Section 3.03 Reporting and Resolving Discrepancies 14
Section 3.04 Reuse of Documents 15
Article IV. Commencement and Progress of the Work 15
Section 4.01 Commencement of Work 15
Section 4.02 Reference Points 15
Section 4.03 Progress Schedule 16
Section 4.04 Delays in Contractor's Progress 16
Article V. Availability of Lands; Subsurface and Physical Conditions; Hazardous Environmental Conditions 16
Section 5.01 Availability of Lands 16
Section 5.02 Use of Site and Other Areas 17
Section 5.03 Differing Subsurface or Physical Conditions or Underground Facilities 17
Section 5.04 Underground Utilities 19
Section 5.05 Hazardous Environmental Conditions at Site 21
Article VI. Bonds and Insurance 21
Section 6.01 Performance and Payment Bonds 21
Section 6.02 Insurance 22
Article VII. Contractor's Responsibilities 23
Section 7.01 Supervision and Superintendence 23
Section 7.02 Labor; Working Hours 24
Section 7.03 Services, Materials, and Equipment 25
Section 7.04 "Or Equals" 25
Section 7.05 Concerning Subcontractors, Suppliers, and Others 26
Section 7.06 Patent Fees and Royalties 27

Section 7.07 Permits 27
Section 7.08 Taxes 27
Section 7.09 Laws and Regulations 27
Section 7.10 Record Documents 28
Section 7.11 Safety and Protection 28
Section 7.12 Emergencies 29
Section 7.13 Shop Drawings, Samples, and Other Submittals 29
Section 7.14 Contractor's General Warranty and Guarantee 31
Section 7.15 Indemnification 32
Section 7.16 Claims Procedure 32
Section 7.17 Delegation of Professional Design Services 33
Article VIII. PWC's Responsibilities 34
Article IX. Amending the Contract Documents; Changes in the Work 34
Section 9.01 Amending and Supplementing Contract Documents 34
Section 9.02 PWC-Authorized Changes in the Work 35
Section 9.03 Unauthorized Changes in the Work 35
Section 9.04 Change of Contract Price 35
Section 9.05 Change of Contract Times 36
Section 9.06 Change Proposals 36
Section 9.07 Execution of Change Orders 37
Section 9.08 Notification to Surety 37
Article X. Tests, Inspections, and Approvals; Correction, Removal, or Acceptance of Defective Work 37
Section 10.01 Access to Work 37
Section 10.02 Tests, Inspections, and Approvals 37
Section 10.03 Defective Work 38
Section 10.04 Acceptance of Defective Work 39
Section 10.05 Uncovering Work 39
Section 10.06 PWC May Stop the Work 40
Section 10.07 PWC May Correct Defective Work 40
Article XI. Claims 40
Section 11.01 Claims Process 40
Section 11.02 Submittal of Claim 41
Section 11.03 Review and Resolution 41
Section 11.04 Dispute Resolution 41
Article XII. Payments to Contractor; Set-Offs; Completion; Correction Period 42
Section 12.01 Progress Payments 42
Section 12.02 Substantial Completion 44

Section 12.03 Partial Use or Occupancy 45
Section 12.04 Final Inspection 46
Section 12.05 Final Payment 46
Section 12.06 Waiver of Claims 47
Section 12.07 Correction Period 47
Article XIII. Suspension of Work and Termination 48
Section 13.01 PWC May Suspend Work 48
Section 13.02 PWC May Terminate for Cause 48
Section 13.03 PWC May Terminate For Convenience 49
Section 13.04 Contractor May Stop Work or Terminate 49
Section 13.05 Morality 50
Article XIV. Miscellaneous 50
Section 14.01 Additional General Terms and Conditions 50
Section 14.02 Giving Notice 50
Section 14.03 Computation of Times 50
Section 14.04 Cumulative Remedies 50
Section 14.05 Limitation of Damages 51
Section 14.06 No Waiver 51
Section 14.07 Survival of Obligations 51
Section 14.08 Controlling Law 51
Section 14.09 Headings 51

General Conditions

Article I. Definitions and Terminology

Section 1.01 Definitions

Capitalized terms used in the Bid Documents or Contract Documents, including the singular and plural forms, shall have the meaning indicated in the definitions below. In addition to terms specifically defined below, terms with initial capital letters in the Contract Documents include references to identified articles and paragraphs, and the titles of other documents or forms.

(a) Addenda—Written or graphic instruments issued before the opening of Bids which clarify, correct, or change the Bid Documents or other Contract Documents.

(b) Agreement—The written instrument, executed by PWC and Contractor, that sets forth the Contract Price and Contract Times, identifies the parties, designates the specific documents that encompass the Contract Documents, and provides other material provisions that govern the relationship between the parties as it relates to the Project. The Agreement is also referred to, and titled as, the "Construction Agreement."

(c) Application for Payment—The form that Contractor shall use during the Work in requesting progress or final payments. Any Application for Payment shall be accompanied by such supporting documentation as is required by the Contract Documents.

(d) Bid—The offer of a Bidder submitted on the prescribed form setting forth the prices for the Work to be performed.

(e) Bidder—An individual or entity that submits a Bid to PWC for the Project.

(f) Bid Documents—The Bidding Requirements, the proposed Contract Documents, and all Addenda.

(g) Bidding Requirements—The Invitation to Bid, Instructions to Bidders, Bid Bond or other Bid security, if any, the Bid Form, and the Bidder's original Bid with any requisite attachments.

(h) Business Day—each calendar day that is not a Saturday, Sunday, or holiday observed by PWC (New Year's Day, Martin Luther King, Jr. Day, Good Friday, Memorial Day, Independence Day, Labor Day, Veteran's Day, Thanksgiving Day (and the day after), and Christmas (2 days) for its employees.

(i) Change Order—A document that is signed by Contractor and PWC, which authorizes an addition, deletion, or revision in the Work, an adjustment in the Contract Price or the Contract Times, a change in the scope of the Project, or other revision to the Agreement, issued on or after the Effective Date of the Agreement.

(j) Change Proposal—A written request by Contractor, submitted in compliance with the procedural requirements set forth in the Contract Documents, seeking an adjustment in Contract Price or Contract Times, or both; contesting an initial decision by PWC concerning the requirements of the Contract Documents or the acceptability of Work under the Contract Documents; challenging a set-off against payments due; or seeking other relief with respect to the terms of the Agreement.

(k) Completion of the Project—Has the meaning as set forth in the Construction Agreement.

(l) Constituent of Concern—Asbestos, petroleum, radioactive materials, polychlorinated biphenyls (PCBs), hazardous waste, and any substance, product, waste, or other material of any nature whatsoever that is or becomes listed, regulated, or addressed pursuant to (a) the Comprehensive Environmental Response, Compensation and Liability Act, 42 U.S.C. §§9601 et seq. ("CERCLA"); (b) the Hazardous Materials Transportation Act, 49 U.S.C. §§5101 et seq.; (c) the Resource Conservation and Recovery Act, 42 U.S.C. §§6901 et seq. ("RCRA"); (d) the Toxic Substances Control Act, 15 U.S.C. §§2601 et seq.; (e) the Clean Water Act, 33 U.S.C. §§1251 et seq.; (f) the Clean Air Act, 42 U.S.C. §§7401 et seq.; or (g) any other federal, state, or local statute, law, rule, regulation, ordinance, resolution, code, order, or decree regulating, relating to, or imposing liability or standards of conduct concerning, any hazardous, toxic, or dangerous waste, substance, or material.

(m) Contract Price—The money that PWC has agreed to pay Contractor for Completion of the Project in accordance with the Contract Documents. May also be referred to as "Price" throughout the Contract Documents.

(n) Contract Times—The number of days or the dates by which Contractor shall: (a) achieve Milestones, if any; and (b) Completion of the Project.

(o) Contractor—The individual or entity with which PWC has contracted for performance of the Work and Completion of the Project.

(p) Cost of the Work

A. Costs Included: To determine Cost of the Work when Cost of the Work is a component of the Contract Price, except as otherwise may be agreed to in writing by PWC, costs included in the Cost of the Work shall be in amounts no higher than those prevailing in the locality of the Project, shall not include any of the excluded costs specifically itemized below, and shall include only the following items:

(i) Payroll costs for employees in the direct employ of Contractor in the performance of the Work under schedules of job classifications agreed upon by Owner and Contractor. Payroll costs for employees not employed full time on the Work shall be apportioned on the basis of their time spent on the Work. Payroll costs shall include, but not be limited to, salaries and wages plus the cost of fringe benefits, which shall include social security contributions, unemployment, excise, and payroll taxes, workers' compensation, health and retirement benefits, bonuses, sick leave, and vacation and holiday pay applicable thereto. The expenses of performing Work outside of regular working hours, on Saturday, Sunday, or legal holidays, shall be included in the above to the extent authorized by Owner.

(ii) Cost of all materials and equipment furnished and incorporated in the Work, including costs of transportation and storage thereof, and Suppliers' field services required in connection therewith. All trade discounts, rebates, and refunds and returns from sale of surplus materials and equipment shall accrue to Owner, and Contractor shall make provisions so that they may be obtained.

(iii) Payments made by Contractor to Subcontractors for Work performed by Subcontractors. If any subcontract provides that the Subcontractor is to be paid on the basis of Cost of the Work plus a fee, the Subcontractor's Cost of the Work and

fee shall be determined in the same manner as Contractor's Cost of the Work and fee as provided in this subsection (p).

(iv) Supplemental costs including the following:

a. Rentals of all construction equipment and machinery, and the parts thereof, whether rented from Contractor or others in accordance with rental agreements approved by Owner. All such costs shall be in accordance with the terms of said rental agreements. The rental of any such equipment, machinery, or parts shall cease when the use thereof is no longer necessary for the Work.

b. Sales, consumer, use, and other similar taxes related to the Work, and for which Contractor is liable, as imposed by Laws and Regulations.

c. The cost of utilities, fuel, and sanitary facilities at the Site.

d. The costs of premiums for all bonds and insurance that Contractor is required by the Contract Documents to purchase and maintain.

B. Costs Excluded: The term Cost of the Work shall not include any of the following items:

(i) Payroll costs and other compensation of Contractor's officers, executives, principals (of partnerships and sole proprietorships), general managers, safety managers, engineers, architects, estimators, attorneys, auditors, accountants, purchasing and contracting agents, expediters, timekeepers, clerks, and other personnel employed by Contractor, whether at the Site or in Contractor's principal or branch office for general administration of the Work and not specifically included in the agreed upon schedule of job classifications agreed upon by Owner and Contractor. The payroll costs and other compensation excluded here are to be considered administrative costs covered by the Contractor's fee.

(ii) Expenses of Contractor's principal and branch offices other than Contractor's office at the Site.

(iii) Any part of Contractor's capital expenses, including interest on Contractor's capital employed for the Work and charges against Contractor for delinquent payments.

(iv) Costs due to the negligence of Contractor, any Subcontractor, or anyone directly or indirectly employed by any of them or for whose acts any of them may be liable, including but not limited to, the correction of defective Work, disposal of materials or equipment wrongly supplied, and making good any damage to property.

(v) Other overhead or general expense costs of any kind and the costs of any item not specifically and expressly included herein.

(vi) Contractor's fee.

A. Documentation: Whenever the Cost of the Work for any purpose is to be determined pursuant to this Article 13, Contractor will establish and maintain records of the Cost of Work in accordance with generally accepted accounting practices and submit in a form acceptable to PWC an itemized cost breakdown together with supporting data.

(q) Day—a calendar day of 24 hours measured from midnight to the next midnight. Also referred to throughout the Contract Documents as "days" or "calendar days."

(r) Design Engineer—The Engineering firm identified on the Contract Drawings and their duly authorized employees and agents, such employees and agents acting within the scope of the particular duties entrusted to them in each case.

(s) Drawings—The part of the Contract that graphically shows the scope, extent, and character of the Work to be performed by Contractor.

(t) Field Order—A written order issued by Project Engineer which requires minor changes in the Work but does not change the Contract Price or the Contract Times.

(u) Final Completion—The day the on which any specified Work is complete in accordance with the Contract Documents.

(v) Hazardous Environmental Condition—The presence at the Site of Constituents of Concern in such quantities or circumstances that may present a danger to persons or property exposed thereto. The presence at the Site of materials that are necessary for the execution of the Work, or that are to be incorporated in the Work, and that are controlled and contained pursuant to industry practices, Laws and Regulations, and the requirements of the Contract Documents, does not establish a Hazardous Environmental Condition.

(w) Laws and Regulations; Laws or Regulations—Any and all applicable laws, statutes, rules, regulations, ordinances, codes, and orders of any and all governmental bodies, agencies, authorities, and courts having jurisdiction. Such terms, unless otherwise specified, shall refer to North Carolina laws and regulations.

(x) Milestone—A principal event in the performance of the Work that the Agreement requires Contractor to achieve by an intermediate completion date or by a time prior to Completion of the Project.

(y) Non-Compliance Notice—A written notice issued by PWC to Contractor indicating a violation of any term, provision, or requirement of the Contract Documents.

(z) Notice of Award—The written notice by PWC to a Bidder providing of PWC's acceptance of the Bid upon timely compliance by the Bidder with any conditions precedent provided in the notice.

(aa) Notice to Proceed—A written notice by PWC to Contractor fixing the date on which the Contract Times will commence to run and on which Contractor shall start to perform the Work.

(bb) Progress Schedule—A schedule, prepared and maintained by Contractor, describing the sequence and duration of the activities comprising the Contractor's plan to accomplish the Work within the Contract Times.

(cc) Project—has the meaning ascribed to it in the Agreement and is as more specifically set forth throughout the Contract Documents. "Project" includes the total undertaking to be accomplished for PWC by engineers, contractors, and others, including planning, study, design, construction, testing, commissioning, and start-up, and of which the Work to be performed under the Contract Documents is a part.

(dd) Project Engineer—the PWC employee assigned by PWC to coordinate, manage, monitor, and otherwise perform the administration necessary and consistent with PWC's responsibilities for the Completion of the Project. The Project Engineer has authority to coordinate and work with the Design Engineer regarding any engineering questions, concerns, revisions, alterations, deletions, or additions to the Work, and has authority to approve any changes in the scope of the Work. Project Engineer may assign a "Project Coordinator" who will also be an employee of PWC and have the duties and responsibilities set by the Project Engineer.

(ee) PWC—Fayetteville Public Works Commission. PWC may also be referred to in the Contract Documents as "Owner."

(ff) Samples—Physical examples of materials, equipment, or workmanship that are representative of some portion of the Work and that establish the standards by which such portion of the Work will be judged.

(gg) Schedule of Submittals—A schedule, prepared and maintained by Contractor, of required submittals and the time requirements for Project Engineer's review of the submittals and the performance of related construction activities.

(hh) Schedule of Values—A schedule, prepared and maintained by Contractor, allocating portions of the Contract Price to various portions of the Work and used as the basis for reviewing Contractor's Applications for Payment.

(ii) Shop Drawings—All drawings, diagrams, illustrations, schedules, and other data or information that are specifically prepared or assembled by or for Contractor and submitted by Contractor to illustrate some portion of the Work. Shop Drawings, whether approved or not, are not Contract Drawings and are not Contract Documents.

(jj) Site—Lands or areas indicated in the Contract Documents as being furnished by PWC upon which the Work is to be performed, including rights-of-way and easements, and such other lands furnished by PWC which are designated for the use of Contractor.

(kk) Specifications—The part of the Contract that consists of written requirements for materials, equipment, systems, standards, and workmanship as applied to the Work, and certain administrative requirements and procedural matters applicable to the Work.

(ll) Subcontractor—An individual or entity having a direct contract with Contractor or with any other Subcontractor for the performance of a part of the Work.

(mm) Substantial Completion—The time at which the Work (or a specified part thereof) has progressed to the point where, in the opinion of Project Engineer, the Work (or a specified part thereof) is sufficiently complete, in accordance with the Contract Documents, so that the Work (or a specified part thereof) can be utilized for the purposes for which it is intended. The terms "substantially complete" and "substantially completed" as applied to all or part of the Work refer to Substantial Completion thereof.

(nn) Successful Bidder—The Bidder whose Bid PWC accepts, and to which PWC provides a Notice of Award.

(oo) Supplementary Conditions—Any part of the Agreement that amends or supplements these General Conditions.

(pp) Supplier—A manufacturer, fabricator, supplier, distributor, materialman, or vendor having a direct contract with Contractor or with any Subcontractor to furnish materials or equipment to be incorporated in the Work by Contractor or a Subcontractor.

(qq) Technical Data—Those items expressly identified as Technical Data in the Supplementary Conditions, with respect to either (a) subsurface conditions at the Site, or physical conditions relating to existing surface or subsurface structures at the Site (except Underground Facilities) or (b) Hazardous Environmental Conditions at the Site. If no such express identifications of Technical Data have been made with respect to conditions at the Site, then the data contained in boring logs, recorded measurements of subsurface water levels, laboratory test results, and other factual, objective information regarding conditions at the Site that are set forth in any geotechnical or environmental report prepared for the Project and made available to Contractor are hereby defined as Technical Data with respect to conditions at the Site under Paragraphs 5.03, 5.04, and 5.06.

(rr) Underground Facilities—All underground pipelines, conduits, ducts, cables, wires, manholes, vaults, tanks, tunnels, or other such facilities or attachments, and any encasements containing such facilities, including but not limited to those that convey electricity, gases, steam, liquid petroleum products, telephone or other communications, fiber optic transmissions, cable television, water, wastewater, storm water, other liquids or chemicals, or traffic or other control systems.

(ss) Unit Price Work—Work to be paid for on the basis of unit prices.

(tt) Work—The entire construction or the various separately identifiable parts thereof required to be provided under the Contract Documents. Work includes and is the result of performing or providing all labor, services, materials, equipment, and documentation necessary to produce such construction; furnishing, installing, and incorporating all materials and equipment into such construction; and may include related services such as testing, start-up, and commissioning, all as required by the Contract Documents and necessary to achieve Completion of the Project.

(uu) Work Change Directive—A written directive to Contractor issued on or after the Effective Date of the Contract, signed by PWC and recommended by the Project Engineer, ordering an addition, deletion, or revision in the Work.

Section 1.02 Terminology

The words and terms discussed in the following paragraphs are not defined but, when used in the Bidding Requirements or Contract Documents, have the indicated meaning.

(a) Intent of Certain Terms or Adjectives:

(i) The Contract Documents include the terms “as allowed,” “as approved,” “as ordered,” “as directed” or terms of like effect or import to authorize an exercise of professional judgment by Project Engineer. In addition, the adjectives “reasonable,” “suitable,” “acceptable,” “proper,” “satisfactory,” or adjectives of like effect or import are used to describe an action or determination of Project Engineer as to the Work. It is intended that such exercise of professional judgment, action, or determination will be solely to evaluate, in general, the Work for compliance with the information in the Contract Documents and with the design concept of the Project as a functioning whole as shown or indicated in the

Contract Documents (unless there is a specific statement indicating otherwise). The use of any such term or adjective is not intended to and shall not be effective to assign to Project Engineer any duty or authority to supervise or direct the performance of the Work, or any duty or authority to undertake responsibility contrary to the provisions the Contract Documents.

(b) Defective—when modifying the word "Work," refers to Work that is unsatisfactory, faulty, or deficient in that it:

(i) does not conform to the Contract Documents; or
(ii) does not meet the requirements of any applicable inspection, reference standard, test, or approval referred to in the Contract Documents; or
(iii) has been damaged prior to Project Engineer's recommendation of final payment (unless responsibility for the protection thereof has been assumed by PWC at Substantial Completion in accordance with the Contract Documents).

(c) Furnish, Install, Perform, Provide

(i) The word "furnish," when used in connection with services, materials, or equipment, shall mean to supply and deliver said services, materials, or equipment to the Site (or some other specified location) ready for use or installation and in usable or operable condition.
(ii) The word "install," when used in connection with services, materials, or equipment, shall mean to put into use or place in final position said services, materials, or equipment complete and ready for intended use.
(iii) The words "perform" or "provide," when used in connection with services, materials, or equipment, shall mean to furnish and install said services, materials, or equipment complete and ready for intended use.
(iv) If the Contract Documents establish an obligation of Contractor with respect to specific services, materials, or equipment, but do not expressly use any of the four words "furnish," "install," "perform," or "provide," then Contractor shall furnish and install said services, materials, or equipment complete and ready for intended use.

Unless stated otherwise in the Contract Documents, words or phrases that have a well-known technical or construction industry or trade meaning are used in the Contract Documents in accordance with such recognized meaning.

Article II. Preliminary Matters

Section 2.01 Delivery of Bonds and Evidence of Insurance

(a) Bonds: Contractor shall deliver to PWC such bonds as Contractor is required to furnish simultaneously with delivering the executed Agreement to PWC.

(b) Contractor's Insurance: Contractor shall deliver to PWC the certificates and other evidence of the insurance required by the Contract Documents simultaneously with delivering the executed Agreement to PWC.

Section 2.02 Copies of Documents

(a) PWC will furnish to Contractor up to five (5) printed copies of the Contract Documents upon request by Contractor, and one (1) copy in electronic portable document format

(PDF). Additional printed copies will be furnished upon request at the cost of reproduction.

(b) PWC will maintain and safeguard at least one original printed record version of the Agreement, including Drawings and Specifications signed and sealed by Design Engineer or other design professionals as applicable. PWC agrees to make such original printed record version of the Agreement reasonably available to Contractor for review during PWC's normal business hours. PWC may delegate the responsibilities under this provision to Design Engineer.

Section 2.03 Before Starting any Work

(a) Within ten (10) Days after the Contractor receives the Notice of Award from PWC (or as otherwise specifically required by the Contract Documents), Contractor shall submit to PWC for timely review:

(i) a preliminary Progress Schedule indicating the times (numbers of days or dates) for starting and completing the identifiable aspects of the Work, including any Milestones specified in the Contract Documents;
(ii) a preliminary Schedule of Submittals; and
(iii) Any Shop Drawings, Samples, and other submittals required by the Contract Documents before the Preconstruction Conference.

Section 2.04 Preconstruction Conference; Designation of Authorized Representatives

(a) Before any Work at the Site is started, a preconstruction conference attended by PWC, Project Engineer, Contractor, Design Engineer, and others as appropriate will be held to establish a working understanding among the parties as to the Work and to discuss general Project issues including, but not limited, the following:
(i) The schedules and submittals referred to in Section 2.03;
(ii) Contractor's designated authorized representative as described in Section 2.04(b);
(iii) Safety;
(iv) Procedures for handling Shop Drawings, Samples, and other submittals;
(v) Processing Applications for Payment, electronic or digital transmittals;

(b) At the preconstruction conference Contractor shall designate, in writing, a specific individual to act as its authorized representative with respect to its services and responsibilities under the Contract Documents. Such individual shall have the authority to transmit and receive information, render decisions relative to the requirements of the Contract Documents, and otherwise act on behalf of the Contractor.

Section 2.05 Initial Acceptance of Schedules

(a) At least twenty (20) Days before submission of the first Application for Payment a conference, attended by Contractor, PWC, and others as appropriate, will be held to review for acceptability to Project Engineer as provided below the schedules submitted in accordance with Paragraph 2.03(a). PWC shall have ten (10) Days to review the submission and provide feedback to Contractor. Contractor shall then have ten (10) days to make any corrections and adjustments as indicated by PWC and to complete and resubmit the schedules as necessary. No progress payment shall be made to Contractor until acceptable schedules are submitted to and approved by Project Engineer.

(b) The Progress Schedule will be acceptable to Project Engineer if it provides an orderly progression of the Work to achieve Completion of the Project within the Contract Times. Such acceptance will not impose on Project Engineer responsibility for the Progress Schedule, for sequencing, scheduling, or progress of the Work, nor interfere with or relieve Contractor from Contractor's full responsibility therefor.

(c) Contractor's Schedule of Submittals will be acceptable to Project Engineer if it provides a workable arrangement for reviewing and processing the required submittals.

Section 2.06 Electronic Transmittals

(a) Except as otherwise stated elsewhere in the Contract Documents, PWC and Contractor and their authorized agents may transmit, and shall accept, Project-related correspondence, text, data, documents, drawings, information, and graphics, including but not limited to Shop Drawings and other submittals, in electronic media or digital format, either directly, or through electronic mail at the address(es) designated by each Party.

(b) When transmitting items in electronic media or digital format, the transmitting party makes no representations as to long term compatibility, usability, or readability of the items resulting from the recipient's use of software application packages, operating systems, or computer hardware differing from those used in the drafting or transmittal of the items, or from those established in applicable transmittal protocols.

Article III. Contract Documents: Intent, Requirements, Reuse

Section 3.01 Intent

(a) The Contract Documents are complementary; what is required by one is as binding as if required by all.

(b) It is the intent of the Contract Documents to describe a functionally complete project (or part thereof) to be constructed in accordance with the Contract Documents.

(c) Project Engineer, Design Engineer, or both, will issue clarifications and interpretations of the Contract Documents as provided herein.

(d) To the extent necessary that Work, construction, or conditions not covered by these General Conditions is required for Contractor to achieve Completion of the Project, "Special Conditions" for such Work will be provided to Contractor and shall be part of the Contract Documents.

(e) In case of any inconsistency, conflict, or ambiguity among the Contract Documents, the documents shall govern in the following order: (1) Change Orders; (2) Addenda; (3) the fully executed Agreement; (4) Special Conditions; (5) any Drawings and Technical Specifications; and (6) General Conditions.

Section 3.02 Reference Standards

(a) Standards Specifications, Codes, Laws and Regulations

(i) Reference in the Contract Documents to standard specifications, manuals, reference standards, or codes of any technical society, organization, or association, or to Laws or Regulations, whether such reference be specific or by implication, shall mean the standard specification, manual, reference standard, code, or North Carolina laws and regulations in effect as of the Effective Date of the Agreement, except as may be otherwise specifically stated in the Contract Documents.

(ii) No provision of any such standard specification, manual, reference standard, or code, or any instruction of a Supplier shall be effective to change the duties or responsibilities of PWC or Contractor, or any of their subcontractors, consultants, agents, or employees, from those set forth in the Contract Documents. No such provision or instruction shall be effective to assign to PWC or any of its officers, directors, members, partners, employees, agents, consultants, or subcontractors, any duty or authority to supervise or direct the performance of the Work or any duty or authority to undertake responsibility inconsistent with the provisions of the part of the Contract Documents.

Section 3.03 Reporting and Resolving Discrepancies

(a) Contractor's Verification of Figures and Measurements

(i) Before undertaking any portion of the Work, Contractor shall review all of the Contract Documents to and check and verify all figures and dimensions for the Project. Contractor shall promptly report in writing to Project Engineer any conflict, error, ambiguity, or discrepancy that Contractor discovers, or has actual knowledge of, and shall not proceed with any Work affected thereby until the conflict, error, ambiguity, or discrepancy is resolved, by a clarification or interpretation by Project Engineer, or by an amendment or supplement to the Contract Documents issued pursuant to these General Conditions.

(ii) If, before or during the performance of the Work, Contractor discovers any conflict, error, ambiguity, or discrepancy within the Contract Documents, or between the Contract Documents and (a) any applicable Law or Regulation, (b) actual field conditions, (c) any standard specification, manual, reference standard, or code, or (d) any instruction of any Supplier, then Contractor shall promptly report it to Project Engineer in writing. Contractor shall not proceed with the Work affected thereby (except in an emergency as defined hereinafter) until the conflict, error, ambiguity, or discrepancy is resolved, by a clarification or interpretation by Project Engineer, or by an amendment or supplement to the Contract Documents issued pursuant to these General Conditions.

(b) Resolving Discrepancies:

(i) Except as may be otherwise specifically stated in the Contract Documents, the provisions of the part of the Contract Documents prepared by or for PWC shall take precedence in resolving any conflict, error, ambiguity, or discrepancy between such provisions of the Contract Documents and:

1) the provisions of any standard specification, manual, reference standard, or code, or the instruction of any Supplier (whether or not specifically incorporated by reference as a Contract Document); or
2) the provisions of any Laws or Regulations applicable to the performance of the Work (unless such an interpretation of the provisions of the Contract Documents would result in violation of such Law or Regulation).

Section 3.04 Reuse of Documents

(a) Contractor and its Subcontractors and Suppliers shall not have or acquire any title to or ownership rights in any of the:

(i) Drawings, Specifications, or other documents (or copies of any thereof) prepared by or bearing the seal of Design Engineer or its consultants, including electronic media editions, or reuse any such Drawings, Specifications, other documents, or copies thereof on extensions of the Project or any other project without written consent of PWC and Design Engineer and specific written verification or adaptation by Design Engineer, where applicable; or

(ii) Contract Documents and shall not reuse any such Contract Documents for any purpose without PWC's express written consent.

(b) The prohibitions of this provision shall survive final payment or termination of the Agreement. Nothing herein shall preclude Contractor from retaining copies of the Contract Documents for record purposes.

Article IV. Commencement and Progress of the Work

Section 4.01 Commencement of Work

(a) The Contract Times will commence to run on the day indicated in the Notice to Proceed issued by PWC to Contractor. A Notice to Proceed may be given at any time after the Effective Date of the Contract.

(b) Contractor shall start to perform the Work on the date when the Contract Times commence to run. No Work shall be done at the Site prior to such date. Contractor's failure to commence the Work within fifteen (15) Days of the date stated in the Notice to Proceed shall be deemed a material breach of the Agreement unless PWC otherwise determines in its sole discretion and agrees in writing to a delay of the Contract Times based on the applicable circumstances.

Section 4.02 Reference Points

(a) Construction staking will be performed by Design Engineer, who will also prepare and furnish construction cut sheets, signed and sealed by a North Carolina professional land surveyor, to PWC and Contractor. Contractor shall not install any utilities without a sheet. All requests for staking shall be made not less than 96 hours in advance.

(b) Contractor shall be responsible for laying out the Work, shall protect and preserve the established reference points and staking, and shall make no changes or relocations without the prior written approval of Project Engineer. Contractor shall report to Project Engineer whenever any reference point staking is lost or destroyed or requires relocation because of necessary changes in grades or locations, and shall be responsible for the accurate replacement or relocation of such reference points or staking by professionally qualified personnel.

Section 4.03 Progress Schedule

(a) Contractor shall adhere to the Progress Schedule established in accordance with Section 2.03 as it may be adjusted from time-to-time as provided below. Contractor shall submit to Project Engineer for acceptance any proposed adjustments in the Progress Schedule that will not result in changing the Contract Times. Proposed adjustments in the Progress Schedule that will change the Contract Times shall be submitted in accordance with the requirements of Article IX.

(b) Contractor shall carry on the Work and adhere to the Progress Schedule during any disputes or disagreements with PWC. No Work shall be delayed or postponed pending resolution of any disputes or disagreements, or during any appeal process, except as permitted by these General Conditions or as PWC and Contractor may otherwise agree in writing.

Section 4.04 Delays in Contractor's Progress

(a) If PWC, Project Engineer, anyone for whom PWC is responsible, or a Force Majeure Event delays, disrupts, or interferes with the performance or progress of the Work, then Contractor shall be entitled to an equitable adjustment in the Contract Times and Contract Price. Contractor's entitlement to an adjustment of the Contract Times is conditioned on such adjustment being essential to Contractor's ability to complete the Work within the Contract Times.

(b) Contractor shall not be entitled to an adjustment in Contract Price or Contract Times for delay, disruption, or interference caused by or within the control of Contractor. Delay, disruption, and interference attributable to and within the control of a Subcontractor or Supplier shall be deemed to be within the control of Contractor.

(c) Contractor must submit any Change Proposal, consistent with the procedure set forth in Article IX, seeking an adjustment in Contract Price or Contract Times under this provision within ten (10) calendar days of the commencement of the event that causes the delay, disruption, or interference with the Work and Contract Times.

Article V. Availability of Lands; Subsurface and Physical Conditions; Hazardous Environmental Conditions

Section 5.01 Availability of Lands

(a) PWC will be responsible for obtaining any required easements and encroachments, and otherwise furnishing the Site, necessary to complete the Work, except as provided elsewhere in the Contract Documents.

(b) Upon reasonable written request, PWC shall furnish to Contractor a current statement of record legal title and legal description of the lands upon which the Work is to be completed and PWC's interest therein.

(c) Contractor shall provide for all additional lands and access thereto that may be required for temporary construction facilities or storage of materials and equipment necessary to complete the Work. Any and all agreements between the Contractor and any individual property owner(s) shall not obligate PWC, PWC's employees, Project Engineer, or Design

Engineer in any manner, and Contractor shall, before performing any work on any such property, obtain a signed and notarized release of liability of PWC and Design Engineer that is suitable to PWC as confirmed in writing.

(d) Contractor and any of its Subcontractors shall exercise care and caution to avoid damage to any private property. Should any such damage to private property occur, it is Contractor's responsibility to notify the Project Engineer promptly in writing that such damage occurred, the extent of the damage, and Contractor's written plan to remedy the damage. If Contractor fails to timely correct damage to private property, PWC reserves the right to withhold progress payments until damage is corrected and/or to correct damage and back-charge Contractor for costs incurred. At the Completion of the Project, Contractor shall obtain a signed release from all owners of private property to which damage occurred that releases PWC and Design Engineer and acknowledges a settlement for the damage or that such damage was adequately remedied.

Section 5.02 Use of Site and Other Areas

(a) Contractor shall confine construction equipment, temporary construction facilities, the storage of materials and equipment, and the operations of workers to the Site and other adjacent areas permitted by Laws and Regulations and shall not unreasonably encumber the Site and such other adjacent areas with construction equipment or other materials or equipment. Contractor shall assume full responsibility for (a) damage to the Site; (b) damage to any such other adjacent areas used for Contractor's operations; (c) damage to any other adjacent land or areas; and (d) for injuries and losses sustained by the owners or occupants of any such land or areas; provided that such damage or injuries result from the performance of the Work or from other actions or conduct of the Contractor or those for which Contractor is responsible.

(b) Contractor shall keep the Site and other adjacent areas free from accumulations of waste materials, rubbish, and other debris during the progress of the Work. Removal and disposal of such debris shall conform to applicable Laws and Regulations.

(c) Prior to Completion of the Project, Contractor shall clean the Site and the Work and make it ready for utilization by PWC. At the completion of all of the Work, Contractor shall remove from the Site and adjacent areas all tools, appliances, construction equipment and machinery, and surplus materials and shall restore to original condition all property not designated for alteration by the Contract Documents.

(d) Contractor shall not load nor permit any part of any structure to be loaded in any manner that will endanger the structure, nor shall Contractor subject any part of the Work or adjacent structures or land to stresses or pressures that will endanger them.

Section 5.03 Differing Subsurface or Physical Conditions or Underground Facilities

(a) If Contractor believes that any subsurface or physical condition or Underground Facilities that is uncovered or revealed at the Site either:

(i) is of such a nature as to establish that any Technical Data on which Contractor is entitled to rely is materially inaccurate;
(ii) is of such a nature as to require a change in the Contract Documents;
(iii) differs materially from that shown or indicated in the Contract Documents; or

(iv) is of an unusual nature, and differs materially from conditions ordinarily encountered and generally recognized as inherent in work of the character provided for in the Contract Documents;

then Contractor shall, promptly after becoming aware thereof and before further disturbing the subsurface or physical conditions or Underground Facilities or performing any Work in connection therewith, notify PWC and Engineer in writing about such condition. Contractor shall not further disturb such condition or perform any Work in connection therewith (except with respect to an emergency) until receipt of a written statement approved by PWC permitting Contractor to do so.

(b) After receipt of Contractor's written notice, Project Engineer will review the subsurface or physical condition or Underground Facilities in question; determine the necessity of PWC obtaining additional exploration or tests with respect to the condition; conclude whether the condition falls within any of the differing site condition categories in this Section5.03; and obtain any pertinent cost or schedule information from Contractor.

(c) Project Engineer will issue a written statement to Contractor regarding the subsurface or physical condition or Underground Facilities in question, which addresses the resumption of Work in connection with such condition and indicates whether any change in the Contract Documents will be made.

(d) Possible Price and Times Adjustments:

(i) Contractor shall be entitled to an equitable adjustment in Contract Price or Contract Times, or both, to the extent that the existence of a differing subsurface or physical condition or Underground Facilities, or any related delay, disruption, or interference, causes an increase or decrease in Contractor's cost of, or time required for, performance of the Work; subject, however, to the following:

1) such condition must fall within at least one of the categories in this Section 5.03; and,
2) Contractor's entitlement to an adjustment of the Contract Times is conditioned on such adjustment being essential to Contractor's ability to complete the Work within the Contract Times.

(ii) Contractor shall not be entitled to any adjustment in the Contract Price or Contract Times with respect to a subsurface or physical condition or Underground Facilities if:

1) Contractor knew of the existence of such condition at the time Contractor proffered its Bid to PWC or executed the applicable Agreement for the Project; or
2) the existence of such condition reasonably could have been discovered or revealed as a result of any examination, investigation, exploration, test, or study of the Site and contiguous areas expressly required by the Bidding Requirements or Contract Documents to be conducted by or for Contractor prior to Contractor's Bid; or
3) Contractor failed to give the written notice as required.

(iii) If PWC and Contractor agree regarding Contractor's entitlement to, and the amount or extent of, any adjustment in the Contract Price or Contract Times, or both, then any such adjustment shall be set forth in a Change Order.

(iv) Contractor may submit a Change Proposal regarding its entitlement to or the amount or extent of any adjustment in the Contract Price or Contract Times, or both, no later than 30 calendar days after Project Engineer's written statement to Contractor regarding the

subsurface or physical condition or Underground Facilities in question.

Section 5.04 Underground Utilities

(a) Contractor shall ascertain the location and type of all underground utility lines or structures that may be located within the limits of the Site or any area where Work is to be performed.

(i) The exact location of underground utilities or structures may vary from prior plans, permits, maps, or other documentation, and others may not be designated. The Contractor is fully responsible for verification of the exact location of all underground utility lines or structures within the limits of the Site or the area where the work is to be performed, whether known or unknown by PWC, and for providing necessary protection and/or repair if damage.

(ii) Should uncharted or incorrectly charted piping or other utilities be encountered during excavations, the Contractor shall immediately halt any Work, notify PWC, and await direction from PWC before proceeding with any Work. The Contractor shall fully cooperate with PWC and any other utility company in keeping respective services and facilities in operation.

(b) PWC has used reasonable care to locate and depict existing underground installation on the construction drawings, but the accuracy cannot be guaranteed, and some items may not be shown which exist. Actual horizontal and vertical locations have not been verified. As part of the Work, the Contractor is required to dig up each utility which may conflict with construction in advance to verify locations. The utilities shall be “dug up” a minimum of fourteen (14) Days in advance of actual installation of new utilities to allow PWC an opportunity to adjust grades and alignments, to avoid a conflict, and to address any other issues.

(c) The Contractor shall adhere to the provisions of the North Carolina Underground Utility Safety and Damage Prevention Act. The Contractor shall make a documented request to the North Carolina One Call Center, and/or individual utility owners, in order to locate any facilities within the Site limits or any area where Work is to be performed at least forty-eight (48) hours in advance of the day the Work is scheduled to begin. The Contractor shall include the cost of any coordination and cooperation for utilities in its Bid.

(i) Location assistance requested from PWC by Contractor should include the actual horizontal location, type number, size, and depth of all lines. All costs associated with locating and marking existing utilities or the utilities representatives shall be the responsibility of the Contractor.

(ii) The Owner, Project Engineer, Design Engineer, and/or Consultants shall not be liable to the Contractor for any claims, costs, losses, or damages incurred or sustained on or in connection with locating existing underground installations.

(d) If the Contractor fails to schedule locates or perform advance physical locations in advance of the construction and a conflict arises, the Contractor will be required to make corrective measures as instructed by the Project Engineer at the Contractor’s expense. The Contractor’s failure to advance plan (minimum fourteen (14) days) by physically

uncovering existing utilities in advance of construction shall not be cause for claim of lost time or for additional compensation. No additional payment will be made for re-mobilization required by the utility locator.

(i) The Contractor shall inform all equipment operators, either those employed by him or those employed by his subcontractors, of information obtained from the utility owners prior to initiation of any aspect of any Work.

(e) PWC and Design Engineer shall not be responsible for the accuracy or completeness of any information or data provided to the Contractor with respect to underground facilities.

(f) The entire cost of all of the following will be included in the Contract Price, and Contractor shall bear full responsibilities for all such costs, including but not limited to:

(i) Reviewing and checking all such information and data;

(ii) Locating all underground facilities shown or indicated in the Contract Documents;

(iii) Coordination of the Work with the owners of such underground facilities, including PWC, during any portion of the Work; and

(iv) The safety and protection of all such underground facilities and repairing any damage thereto resulting from the Work.

(g) Contractor shall be responsible for the discovery of existing underground installations, in advance of any excavating or trenching as required in the Contract Documents.

(h) If an underground facility is discovered at or contiguous to the Site that was not shown or indicated in the Contract Documents or of which Contractor was not aware prior to starting that portion of any Work, Contractor shall, immediately after becoming aware thereof and before further disturbing conditions affected thereby or performing any Work in connection therewith (except in an emergency), identify the owner of such underground facility and give written notice to PWC. Upon receipt of written notice, PWC will review the pertinent condition, determine the necessity of obtaining additional information, and advise Contractor in writing. During such time, Contractor shall be responsible for the safety and protection of such underground facility. If PWC concludes that a change in the Contract Documents is required, a Change Order will be issued.

(i) The Contract Price and/or the Contract Time, may be adjusted if PWC determines, in its discretion, that the existence of such differing subsurface or physical condition causes an increase or decrease in Contractor's cost of, or time required for, performance of the Work subject to the following:

1) Facility was not shown or indicated in the Contract Documents, and
2) The Contractor did not know of or could not anticipate the facility.

Section 5.05 Hazardous Environmental Conditions at Site

(a) Contractor shall not be responsible for removing or remediating any Hazardous Environmental Condition encountered, uncovered, or revealed at the Site unless such removal or remediation is expressly identified in the Contract Documents to be within the scope of the Work or Hazardous Environmental Condition was caused by Contractor.

(b) Contractor shall be responsible for controlling, containing, and removing all Constituents of Concern brought to the Site by Contractor, Subcontractors, Suppliers, or anyone else for whom Contractor is responsible, and for any associated costs; and for the costs of removing and remediating any Hazardous Environmental Condition created by the presence of any such Constituents of Concern.

(c) If Contractor encounters, uncovers, or reveals a Hazardous Environmental Condition whose removal or remediation is not expressly identified in the Contract Documents as being within the scope of the Work, or if Contractor or anyone for whom Contractor is responsible creates a Hazardous Environmental Condition, then Contractor shall immediately: (1) secure or otherwise isolate such condition; (2) stop all Work in connection with such condition and in any area affected thereby (except in an emergency); and (3) immediately notify Project Engineer (and promptly thereafter confirm such notice in writing). Project Engineer will evaluate such condition or take corrective action, if any. If Contractor or anyone for whom Contractor is responsible created the Hazardous Environmental Condition in question, then PWC may have the Hazardous Environmental Condition removed and remediated and impose a set-off against payments to Contractor to account for the reasonable associated costs.

(d) Contractor shall not resume Work in connection with such Hazardous Environmental Condition or in any affected area until after PWC has delivered written notice to Contractor either (1) specifying that such condition and any affected area is or has been rendered safe for the resumption of Work, or (2) specifying any special conditions under which such Work may be resumed safely.

(e) If PWC and Contractor cannot agree as to entitlement to or on the amount or extent, if any, of any adjustment in Contract Price or Contract Times, or both, as a result of such Work stoppage or such special conditions under which Work is agreed to be resumed by Contractor, then within thirty (30) calendar days of PWC's written notice regarding the resumption of Work, Contractor may submit a Change Proposal or PWC may impose a set-off.

(f) If after receipt of such written notice Contractor does not agree to resume such Work based on reasonable evidence it is unsafe or does not agree to resume such Work under such special conditions, then PWC may order the portion of the Work that is in the area affected by such condition to be deleted from the Work.

Article VI. Bonds and Insurance

Section 6.01 Performance and Payment Bonds

(a) Contractor shall obtain and furnish to PWC a performance bond in the amount of one hundred percent (100%) of the Contract Price, conditioned upon the faithful performance of the Project and all Work in accordance with the Contract Documents, which bond shall be

solely for the protection of PWC.

(b) Contractor shall obtain and furnish to PWC a payment bond in the amount of one hundred percent (100%) of the Contract Price, conditioned upon the prompt payment for all labor or materials for which the Contractor or one or more of its subcontractors is liable, which payment bond shall be solely for the protection of the persons furnishing materials or performing labor for which the Contractor is liable.

(c) The performance bond and the payment bond shall be executed by one or more surety companies legally authorized to do business in the State of North Carolina, shall become effective upon the awarding of the construction contract by PWC to Contractor, and shall at all times comply with the requirements set forth in Article 3 of North Carolina General Statutes Chapter 44A.

(d) In the event PWC deems the surety or sureties upon any bond necessary for the Agreement and the completion of the Project, or if for any reason, such bond ceases to be adequate to cover the performance and/or payment of the Work, Contractor shall, at its expense, and within ten (10) days after the receipt of notice from PWC, furnish such additional bond(s) in such form and amount, and with such surety or sureties, as shall be satisfactory to PWC. In such event no further payment to Contractor shall be deemed to be due under this Agreement until new or additional security for the performance and payment of the Project shall be furnished in manner and form satisfactory to PWC.

(e) By executing the Agreement, Contractor understands and acknowledges that PWC, as a public authority, and the City, as a municipal corporation, are not subject to the provisions of Articles 1 and 2 of Chapter 44A of the General Statutes, in accordance with G.S. 44A-34 and applicable law.

Section 6.02 Insurance

(a) Contractor shall maintain during the life of the Agreement and during the completion of any Work the following insurance coverages, which insurance shall be placed with insurance companies authorized to do business in the State of North Carolina and rate A minus VII or better by the current edition of Best's Key Rating Guide or otherwise approved in writing by PWC:

(i) Commercial general liability insurance with limits of $1,000,000 per occurrence, $2,000,000 aggregate other than products/completed operations; $2,000,000 aggregate for products/completed. Commercial general liability coverage shall be written on an "occurrence" basis.

(ii) Automobile liability insurance in an amount not less than $1,000,000 combined single limit per accident for bodily injury and property damage from owned, non-owned, and hired automobiles.

(iii) Workers' compensation insurance as required by the Laws and Regulations. In the event any employee(s), contractor(s), or subcontractor(s) engaged to perform any Work under the Agreement is not protected under the applicable workers' compensation laws, the Contractor shall provide adequate coverage for the protection of such employee(s), contractor(s), or subcontractor(s) not otherwise protected.

(iv) In the event the Project concerns building construction or repair work, Contractor shall purchase and maintain "Builder's Risk" insurance. This insurance shall include the interests of the PWC, Contractor, and any Subcontractor(s) and shall be written on a one hundred percent (100%) completed value basis (full value as of the date that all construction is finished and includes the Contractor's Contract Price), and to remain in force until Completion of the Project.

(v) Regardless of the nature of the work to be performed, coverage must also be provided for the theft or damage of building materials and supplies, which are not permanently attached or stored on Site for any period of time. This coverage shall be an "Installation Floater." If no building construction or repair is involved for the Project, the amount of the coverage shall equal the value of the materials stored on site.

(b) Prior to initiating any Work on the Project, Contractor shall deliver certificates of insurance confirming each such coverage set forth above, and Contractor shall direct its insurers to provide annually to PWC certificates confirming each such coverage during the coverage period.

(c) PWC shall be named as an additional insured in the comprehensive automobile and commercial liability insurance policies.

(d) Contractor shall not reduce or allow the required insurance coverages to lapse without PWC's prior written approval. All policies for insurance must be endorsed to contain a provision giving PWC a thirty (30) calendar day prior written notice by certified mail of any cancellation of that policy or material reduction in coverage. Should a notice of cancellation be issued for non-payment of premiums or any part thereof, or should Contractor fail to provide and maintain certificates as set forth herein, PWC shall have the right, but shall not have the obligation, to pay such premium to the insurance company or to obtain such coverage and to deduct such payment from any sums that may be due or become due to Contractor, or to seek reimbursement for said payments from Contractor. Any such sums paid by PWC shall be due and payable immediately by Contractor upon notice from PWC.

(e) The insurance coverage requirements shall not be construed as a limitation on Contractor's responsibilities and liabilities pursuant to the terms and conditions of this Agreement. Contractor's obligation to maintain insurance for three (3) years after Completion of the Project shall survive the termination of this Agreement.

(f) If Contractor fails to obtain and maintain any required insurance, PWC may exclude Contractor from the Site, impose an appropriate set-off against payment, and exercise PWC's termination rights pursuant to the Contract Documents.

(g) PWC does not represent that insurance coverage and limits established in this Contract necessarily will be adequate to protect Contractor or Contractor's interests.

Article VII. Contractor's Responsibilities

Section 7.01 Supervision and Superintendence

(a) Contractor shall supervise, inspect, and direct the Work competently and efficiently, devoting such attention and applying such skills and expertise as may be necessary to

perform the Work in accordance with the Contract Documents. Contractor shall be solely responsible for the means, methods, techniques, sequences, and procedures of construction subject to the terms, provisions, and specifications set forth in the Contract Documents.

(b) At all times during the progress of the Work, Contractor shall assign a competent superintendent, satisfactory to Project Engineer, to supervise the Work and to respond to Project Engineer concerning PWC's interests in the Work.

(c) Contractor's superintendent shall have full authority to act on behalf of Contractor and all communications, instructions, directions, and notices given to the superintendent by the Project Engineer shall be binding to the Contractor.

(d) Contractor's superintendent shall be responsible for coordination of the Work with other contractors or subcontractors. The superintendent shall not be replaced without written notice to PWC except under extraordinary circumstances.

(e) Subcontractors

(i) Contractor shall submit the names and references all Subcontractors to the Project Engineer for approval before commencing any Work.

1) In the event Contractor seeks to substitute any Subcontractor that was identified in Contractor's Bid, Contractor shall promptly provide PWC with: (1) the Subcontractor it seeks to substitute; (2) the identity of the Subcontractor to be substituted; and (3) the reason for the requested substitution.

2) PWC will review the requested substitution within five (5) Business Days and provide written approval or denial of the substitution, with such approval not to be unreasonably withheld.

(ii) Contractor's superintendent shall be available to be present at the Site at any time that any Subcontractor(s) is performing any of the Work. Construction activity shall be stopped if the Contractor's superintendent is not available to be at the Site.

Section 7.02 Labor; Working Hours

(a) Contractor shall provide competent, suitably qualified personnel to survey and lay out the Work and perform construction as required by the Contract Documents. Contractor shall at all times maintain good discipline and order at the Site. Contractor shall remove from the Project any person who appears incompetent, disorderly, or otherwise unsatisfactory. Contractor shall also remove any person who appears in PWC's sole discretion to be incompetent, disorderly, or otherwise unsatisfactory

(b) Except as otherwise required for the safety or protection of persons or the Work or property at the Site or adjacent thereto, and except as otherwise stated in the Contract Documents, all Work at the Site shall be performed on Business Days. Contractor will not perform Work on non-Business Days. Contractor may perform Work outside regular working hours or on Saturdays, Sundays, or legal holidays only with PWC's written consent, which will not be unreasonably withheld. In such circumstances, Contractor shall submit a written request to PWC at least two (2) Business Days prior to any Work that it requests to complete on a

non-Business Day and PWC will, in its sole discretion, approve or deny such request. If such work outside of a Business Day is approved, PWC will set forth the specific parameters that Contractor must follow, including time of work, personnel, and any other issues.8

Section 7.03 Services, Materials, and Equipment

(a) Unless otherwise specified in the Contract Documents, Contractor shall provide and assume full responsibility for all services, materials, equipment, labor, transportation, construction equipment and machinery, tools, appliances, fuel, power, light, heat, telephone, water, sanitary facilities, temporary facilities, and all other facilities and incidentals necessary for the performance, testing, start up, and Completion of the Project, whether or not such items are specifically called for in the Contract Documents.

(b) All materials and equipment incorporated into the Work shall be of good quality and new, except as otherwise specified in the Contract Documents. All special warranties and guarantees required by the Specifications shall expressly run to the benefit of PWC. If required by PWC or its designee, Contractor shall furnish satisfactory evidence (including reports of required tests) as to the source, kind, and quality of materials and equipment.

(c) All materials and equipment shall be stored, applied, installed, connected, erected, protected, used, cleaned, and conditioned in accordance with instructions of the applicable Supplier, except as otherwise may be specified in the Contract Documents.

Section 7.04 "Or Equals"

(a) Whenever an item of material or equipment is specified or described in the Contract Documents by using the name of a proprietary item or the name of a particular Supplier, the specification or description of such an item is intended to establish the type, function, appearance, and quality required. Unless the specification or description contains or is followed by words reading that no like, equivalent, or "or equal" item is permitted, Contractor may request that Project Engineer authorize the use of other items of material or equipment under the circumstances described below.

(i) If Project Engineer determines that an item of material or equipment proposed by Contractor is functionally equal to that named and sufficiently similar so that no change in related Work will be required, Project Engineer shall deem it an "or equal" item and confirm such in writing to Contractor. A proposed item of material or equipment will be considered functionally equal to an item so named if:

1) in the exercise of reasonable judgment Project Engineer determines that:

a) it is at least equal in materials of construction, quality, durability, appearance, strength, and design characteristics;
b) it will reliably perform at least equally well the function and achieve the results imposed by the design concept of the completed Project as a functioning whole;
c) it has a proven record of performance and availability of responsive service; and
d) it is not objectionable to PWC.

2) Contractor certifies that, if approved and incorporated into the Work:

a) there will be no increase in the Contract Price or Contract Times; and

b) it will conform substantially to the detailed requirements of the item specified in the Contract Documents.

(b) Contractor shall provide all data in support of any proposed “or equal” item at Contractor’s expense.

(c) Project Engineer will be allowed a reasonable time to evaluate each “or-equal” request. Project Engineer may require Contractor to furnish additional data about the proposed “or-equal” item. Project Engineer will be the sole judge of acceptability. Contractor shall not order, furnish, install, or utilize any “or-equal” it until Project Engineer has reviewed the request, determined that the proposed item is an “or-equal,” and provided written confirmation to Contractor.

(d) Project Engineer’s denial of an “or-equal” request shall be final and binding and may not be reversed through an appeal under any provision of the Contract Documents.

Section 7.05 Concerning Subcontractors, Suppliers, and Others

(a) Contractor may retain Subcontractors and Suppliers for the performance of parts of the Work. Such Subcontractors and Suppliers must be acceptable to PWC.

(b) Contractor shall not subcontract more than forty-nine percent (49%) of the final Contract Price.

(c) Contractor shall retain specific Subcontractors, Suppliers, or other individuals or entities for the performance of designated parts of the Work if required by the Contract Documents.

(d) After the submittal of Contractor’s Bid or final negotiation of the terms of the Agreement, PWC may not require Contractor to retain any Subcontractor, Supplier, or other individual or entity to furnish or perform any of the Work.

(e) Prior to entry into any binding subcontract or purchase order, Contractor shall submit to PWC the identity of the proposed Subcontractor or Supplier (unless PWC has already deemed such proposed Subcontractor or Supplier acceptable, during the bidding process or otherwise). Such proposed Subcontractor or Supplier shall be deemed acceptable to PWC unless PWC raises a substantive, reasonable objection within five (5) Business Days.

(f) No acceptance by PWC of any such Subcontractor, Supplier, or other individual or entity, whether initially or as a replacement, shall constitute a waiver of the right of PWC to the completion of the Work in accordance with the Contract Documents.

(g) Contractor shall be fully responsible to PWC for all acts and omissions of the Subcontractors, Suppliers, and other individuals or entities performing or furnishing any of the Work just as Contractor is responsible for Contractor’s own acts and omissions.

(h) Contractor shall be solely responsible for scheduling and coordinating the Subcontractors, Suppliers, and all other individuals or entities performing or furnishing any of the Work.

(i) Contractor shall restrict all Subcontractors, Suppliers, and such other individuals or entities performing or furnishing any of the Work from communicating with PWC, except through Contractor or in case of an emergency, or as otherwise expressly allowed herein.

(j) All Work performed for Contractor by a Subcontractor or Supplier shall be pursuant to an appropriate contractual agreement that specifically binds the Subcontractor or Supplier to the applicable terms and conditions of the Contract Documents for the benefit of PWC.

(k) PWC may furnish to any Subcontractor or Supplier, to the extent practicable, information about amounts paid to Contractor on account of Work performed for Contractor by the particular Subcontractor or Supplier.

(l) Nothing in the Contract Documents:

(i) shall create for the benefit of any such Subcontractor, Supplier, or other individual or entity any contractual relationship between PWC or Design Engineer and any such Subcontractor, Supplier, or other individual or entity; nor

(ii) shall create any obligation on the part of PWC or Design Engineer to pay or to see to the payment of any money due any such Subcontractor, Supplier, or other individual or entity except as may otherwise be required by Laws and Regulations.

Section 7.06 Patent Fees and Royalties

(a) Contractor shall pay all license fees and royalties and assume all costs incident to the use in the performance of the Work or the incorporation in the Work of any invention, design, process, product, or device that is the subject of patent rights or copyrights held by others. If a particular invention, design, process, product, or device is specified in the Contract Documents for use in the performance of the Work and if, to the actual knowledge of PWC, its use is subject to patent rights or copyrights calling for the payment of any license fee or royalty to others, the existence of such rights shall be disclosed by PWC in the Contract Documents.

Section 7.07 Permits

(a) Unless otherwise specified in the Contract Documents, Contractor shall obtain and pay for all construction permits and licenses necessary to achieve Completion of the Project. Contractor shall timely seek assistance from PWC if necessary to obtain any permits or licenses; provided that, the Contract Time shall not be extended if PWC determines, in its discretion, that Contractor delayed or otherwise did not act expeditiously in requesting such assistance. PWC shall assist Contractor, when necessary, in obtaining such permits and licenses. Contractor shall pay all governmental charges and inspection fees necessary for Completion of the Project that are applicable at the time of the submission of Contractor's Bid.

Section 7.08 Taxes

(a) Contractor shall pay all sales, consumer, use, and other similar taxes required to be paid by Contractor in accordance with the applicable Laws and Regulations for the Project and which are applicable during the performance of the Work.

Section 7.09 Laws and Regulations

(a) Contractor shall give all notices required by, and shall comply with, all Laws and Regulations applicable to the Project. Except as otherwise expressly required, PWC shall

not be responsible for monitoring Contractor's compliance with any Laws or Regulations.

(b) Contractor shall bear all resulting costs and losses for any of its actions or inactions that are contrary to Laws or Regulations.

(c) PWC or Contractor may give notice to the other party of any changes after the submission of Contractor's Bid (or after the date when Contractor became bound under the Agreement) concerning any Laws or Regulations having an effect on the Contract Price or Contract Times, including but not limited to changes in Laws or Regulations having an effect on procuring permits and on sales, use, value-added, consumption, and other similar taxes. If PWC and Contractor are unable to agree on entitlement to or on the amount or extent, if any, of any adjustment in Contract Price or Contract Times resulting from such changes, then within 30 calendar days of such notice Contractor may submit a Change Proposal.

Section 7.10 Record Documents

(a) Contractor shall maintain in good order one (1) printed record copy of all Drawings, Specifications, Addenda, Change Orders, Work Change Directives, Field Orders, written interpretations and clarifications, and approved Shop Drawings. These record documents, together with all approved Samples, will be available to Project Engineer for reference. Upon completion of the Work, Contractor shall deliver these record documents to PWC.

Section 7.11 Safety and Protection

(a) Contractor shall be solely responsible for initiating, maintaining, and supervising all safety precautions and programs in connection with the Work. Such responsibility does not relieve Subcontractors of their responsibility for the safety of persons or property in the performance of their work, nor for compliance with applicable safety Laws and Regulations. Contractor shall take all necessary precautions for the safety of, and shall provide the necessary protection to prevent damage, injury, or loss to:

(i) all persons on the Site or who may be affected by the Work;
(ii) all the Work and materials and equipment to be incorporated therein, whether in storage on or off the Site; and
(iii) other property at the Site or adjacent thereto, including trees, shrubs, lawns, walks, pavements, roadways, structures, other work in progress, utilities, and Underground Facilities not designated for removal, relocation, or replacement in the course of construction.

(b) Contractor shall comply with all applicable Laws and Regulations relating to the safety of persons or property, or to the protection of persons or property from damage, injury, or loss, and shall erect and maintain all necessary safeguards for such safety and protection. Contractor shall notify PWC, the owners of adjacent property or Underground Facilities, and other contractors and owners performing work at or adjacent to the Site, when prosecution of the Work may affect them, and shall cooperate with them in the protection, removal, relocation, and replacement of their property or work in progress.

(c) Contractor shall comply with the requirement of any of PWC's applicable health programs, which may be revised from time to time based on specific circumstances or applicable guidance from the Center for Disease Control or other applicable entity. Such health programs will be identified in the Special Conditions if applicable to the Project.

(d) Contractor shall comply with the requirements of PWC's applicable safety programs. The Special Conditions identify any of PWC's safety programs that are applicable to the Project.

(e) Contractor shall remedy, at its expense, all damage, injury, or loss to any property caused, directly or indirectly, in whole or in part, by Contractor, any Subcontractor, Supplier, or any other individual or entity directly or indirectly employed by any of them to perform any of the Work, or anyone for whose acts any of them may be liable.

(f) Contractor's duties and responsibilities for safety and protection shall continue until such time as Completion of the Project is achieved.

(g) Contractor's duties and responsibilities for safety and protection shall resume whenever Contractor or any Subcontractor or Supplier returns to the Site to fulfill warranty or correction obligations, or to conduct other tasks arising from the Contract Documents.

(h) Contractor shall designate in writing to PWC a qualified and experienced safety representative at the Site whose duties and responsibilities shall be the prevention of accidents and the maintaining and supervising of safety precautions and programs.

Section 7.12 Emergencies

(a) In emergencies affecting the safety or protection of persons or the Work or property at the Site or adjacent thereto, Contractor is obligated to, and shall, act to prevent threatened damage, injury, or loss. Contractor shall give PWC prompt written notice if Contractor believes that any significant changes in the Work or variations from the Contract Documents have been caused or are required as a result of any emergency. If PWC determines that a change in the Contract Documents is required because of the action taken by Contractor in response to such an emergency, a Work Change Directive or Change Order will be issued.

Section 7.13 Shop Drawings, Samples, and Other Submittals

(a) Contractor shall timely submit Shop Drawings and Samples required by the Contract Documents to Project Engineer for review and approval in accordance with applicable specifications.

(b) Before submitting a Shop Drawing or Sample, Contractor shall have

(i) reviewed the Shop Drawing or Sample with other Shop Drawings and Samples and with the requirements of the Work and the Contract Documents;
(ii) verified all measurements, quantities, dimensions, performance and design criteria, installation requirements, materials, catalog numbers, and similar information;
(iii) verified the suitability of all materials and equipment offered with respect to the indicated application, fabrication, shipping, handling, storage, assembly, and installation pertaining to the performance of the Work; and
(iv) verified all information relative to Contractor's responsibilities for means, methods, techniques, sequences, and procedures of construction, and safety precautions and programs incident thereto.

(c) With each submittal, Contractor shall give Project Engineer specific written notice of any

variations that the Shop Drawing or Sample may have from the requirements of the Contract Documents. This notice shall be a written communication separate from the Shop Drawings or Sample submittal; and, in addition, in the case of Shop Drawings by a specific notation made on each Shop Drawing submitted to PWC for review and approval of each such variation.

(d) Where a Shop Drawing or Sample is required by the Contract Documents, any related Work performed prior to Project Engineer's review and approval of the pertinent submittal will be at the sole expense and responsibility of Contractor.

(e) Project Engineer will provide timely review of any required Shop Drawings and Samples. Such review, and subsequent determination of approval, will be only to determine if the items covered by the submittals will, after installation or incorporation in the Work, conform to the information given in the Contract Documents and be compatible with the design concept of the completed Project as a functioning whole as indicated by the Contract Documents.

(f) Project Engineer's review and approval will not extend to means, methods, techniques, sequences, or procedures of construction or to safety precautions or programs incident thereto.

(g) Project Engineer's review and approval of a Shop Drawing or Sample, or of a variation from the requirements of the Contract Documents, shall not change the Contract Times or Contract Price, unless such changes are included in a Change Order.

(h) Project Engineer's receipt, review, acceptance or approval of a Shop Drawing, Sample, or other submittal shall not result in such item becoming a Contract Document.

(i) Contractor shall perform the Work in compliance with the requirements and commitments set forth in approved Shop Drawings and Samples.

(j) Resubmittal Procedures:

(i) Contractor shall make corrections required by Project Engineer and shall return the required number of corrected copies of Shop Drawings and submit new Samples as required for review and approval. Contractor shall direct specific attention in writing to revisions other than the corrections called for by PWC or Project Engineer on previous submittals.

(ii) Contractor shall furnish required submittals with sufficient information and accuracy to obtain required approval of an item with no more than three (3) submittals. If PWC has engaged a Design Engineer for the Project, Design Engineer will record Design Engineer's time for reviewing a fourth or subsequent submittal of a Shop Drawings, sample, or other item requiring approval, and Contractor shall be responsible for Design Engineer's charges to PWC for such time. PWC may impose a set-off against payments due to Contractor to secure reimbursement for such charges.

(iii) If Contractor requests a change of a previously approved submittal item, Contractor shall be responsible for Design Engineer's charges to PWC for its review time, and PWC may impose a set-off against payments due to Contractor to secure reimbursement for such charges, unless the need for such change is beyond the control of Contractor.

Section 7.14 Contractor's General Warranty and Guarantee

(a) In order to induce PWC to enter into an Agreement with Contractor for the Project, Contractor warrants and guarantees to PWC that:

(i) Contractor is duly licensed in the State of North Carolina to complete all Work necessary for the Project, is duly organized, validly existing and in good standing and has all requisite powers, rights, and authority to execute, enter into, and perform the Agreement in accordance with the terms and conditions of the Agreement, and the Agreement constitutes a legal, valid, and binding obligation of Contractor enforceable against it in accordance with its terms.

(ii) Contractor has read the Contract Documents, and acknowledges and understands all data, materials, specifications, and requirements identified in the Contract Documents.

(iii) Contractor has visited the site for the Project, conducted a thorough, visual examination of the site and adjacent areas, and become familiar with and is satisfied as to the general, local, and site conditions that may affect cost, progress, and performance in completing the Project.

(iv) Contractor is familiar with and is satisfied as to all laws and regulations that may affect cost, progress, and performance to complete the Project.

(v) Contractor has carefully studied all: (1) reports of explorations and tests of subsurface conditions at or adjacent to the site and all drawings of physical conditions relating to existing surface or subsurface structures at the site that have been identified in the Detail Specifications and any accompanying reports and drawings, and (2) reports and drawings relating to any Hazardous Environmental Condition at or adjacent to the site that have been identified in the Contract Documents and any accompanying reports and drawings.

(vi) Contractor has considered the information known to Contractor itself; information commonly known to contractors doing business in the locality of the Site; information and observations obtained from visits to the Site; the Contract Documents; and the Site-related reports and drawings identified in the Contract Documents, if any, with respect to the effect of such information, observations, and documents on (1) the cost, progress, and performance of the Work; (2) the means, methods, techniques, sequences, and procedures of construction to be employed by Contractor; and (3) Contractor's safety precautions and programs.

(vii) Based on the information and observations referred to in subsection "(v)" of this Section, Contractor agrees that no further examinations, investigations, explorations, tests, studies, or data are necessary for the performance of the Work at the Contract Price and in accordance with the other terms and conditions of the Contract Documents.

(viii) Contractor is aware of the general nature of work to be performed by PWC and others at the Site that relates to the Work as indicated in the Contract Documents.

(ix) Contractor has given PWC written notice of all conflicts, errors, ambiguities, or discrepancies that Contractor has discovered in the Contract Documents, and the written resolution thereof by PWC is acceptable to Contractor.

(x) The Contract Documents are generally sufficient to indicate and convey understanding of all terms and conditions for performance and furnishing of the Work.

(xi) Contractor's entry into this Agreement constitutes an incontrovertible representation by Contractor that, without exception, all prices in the Agreement are premised upon performing and furnishing the Work required by the Contract Documents.

(xii) Contractor has no business or personal relationship with any PWC Commissioner, officer, director, manager, or supervisor and Contractor covenants to disclose immediately to PWC any such relationship that develops during the performance of Work on the Project.

(b) Contractor's obligation to perform and complete the Work in accordance with the Contract Documents shall be absolute. None of the following will constitute an acceptance of Work that is not in accordance with the Contract Documents or a release of Contractor's obligation to perform the Work in accordance with the Contract Documents:

(i) observations by Project Engineer;
(ii) recommendation by Project Engineer or payment by PWC of any progress or final payment;
(iii) the issuance of a certificate of Substantial Completion by Project Engineer or any payment related thereto by PWC;
(iv) use or occupancy of the Work or any part thereof by PWC;
(v) any review and approval of a Shop Drawing or Sample submittal;
(vi) the issuance of a notice of acceptability by Project Engineer;
(vii) any inspection, test, or approval by others; or
(viii) any correction of defective Work by PWC.

(c) If the Contract Documents requires the Contractor to accept the assignment of a contract entered into by PWC, then the specific warranties, guarantees, and correction obligations contained in the assigned contract shall govern with respect to Contractor's performance obligations to PWC for the Work described in the assigned contract.

Section 7.15 Indemnification

(a) Contractor shall indemnify, defend, and hold harmless PWC and its Commissioners, officers, employees, agents, and representatives and the City and its elected officials, managers, employees, agents, and representatives and Designer (collectively "Indemnitees") from and against all claims, actions, liabilities, damages, losses, costs, and expenses (including, without limitation, injury to or death of any persons and damage to property, economic and consequential damages and attorneys' fees) asserted by one or more third parties against one or more of the Indemnitees if the Fault of one or more Responsible Persons is a proximate cause of the loss, damage, or expense indemnified.

(b) Contractor's obligation to indemnify, defend, and hold harmless the Indemnitees shall survive the termination of the Agreement.

(c) In any and all claims against the Indemnitees of Contractor, any Subcontractor, any Supplier, or any individual or entity directly or indirectly employed by any of them to perform any of the Work, or anyone for whose acts any of them may be liable, Contractor's indemnification obligation shall not be limited in any way by any limitation on the amount or type of damages, compensation, or benefits payable by or for Contractor or any such Subcontractor, Supplier, or other individual or entity under workers' compensation acts, disability benefit acts, or other employee benefit acts.

Section 7.16 Claims Procedure

(a) PWC shall notify the Contractor of all potential claims related to the Work within seven (7) calendar days of receiving notification or having knowledge of such potential claim. Should the Contractor receive a potential claim related to the Work, the Contractor shall notify PWC within seven (7) calendar days of receiving notification. The Contractor shall provide the claimant and PWC with a written response acknowledging receipt of the claim within

seven (7) calendar days.

(b) If the Contractor meets with the Claimant about the claim, a representative designated by PWC shall be present at all times. PWC shall maintain a record of any claim received, and the steps taken to resolve. PWC shall also concurrently investigate each case. The Contractor agrees to furnish PWC any information regarding the claim, the actions which led to the claim and/or the investigation of the claim. Contractor shall provide their proposed response to PWC within thirty (30) calendar days of receiving the claim. Upon receipt of the response PWC and the Contractor will discuss and reach a mutual agreement of the response necessary to send to the Claimant within fifteen (15) calendar days. Once the agreement is made the Contractor shall make a formal written resolution to the claimant.

(c) Failure to act in good faith or respond to a claim in the timelines established by the Contract Documents will constitute a lack of response by the Contractor, therefore validating the claim. PWC will deduct the total amount of the claim from the monthly pay application. Failure to comply with the above requirements for resolving claims may, at the sole discretion of PWC, result in breach of contract.

(d) The Contractor is aware of these claims procedures and understands that it is the PWC's practice to pursue reimbursement/subrogation for any and all claims related expenses, which are incurred as a result of the Contractor's performance under this Contract Documents and allowed within the applicable statute of limitations.

Section 7.17 Delegation of Professional Design Services

(a) Contractor will not be required to provide professional design services unless such services are specifically required by the Contract Documents for a portion of the Work or unless such services are required to carry out Contractor's responsibilities for construction means, methods, techniques, sequences and procedures. Contractor shall not be required to provide professional services in violation of applicable Laws and Regulations.

(b) If professional design services or certifications by a design professional related to systems, materials, or equipment are specifically required of Contractor by the Contract Documents, PWC will specify all performance and design criteria that such services must satisfy. Contractor shall cause such services or certifications to be provided by a properly licensed professional, whose signature and seal shall appear on all drawings, calculations, specifications, certifications, and other submittals prepared by such professional. Shop Drawings and other submittals related to the Work designed or certified by such professional, if prepared by others, shall bear such professional's written approval when submitted to PWC.

(c) PWC shall be entitled to rely upon the adequacy, accuracy, and completeness of the services, certifications, or approvals performed by such design professionals, provided PWC has specified to Contractor all performance and design criteria that such services must satisfy.

(d) Pursuant to this Section, PWC's, or its designee's, review and approval of design calculations and design drawings will be only for the limited purpose of checking for conformance with performance and design criteria given and the design concept expressed in the Contract Documents. PWC specifically retains final approval of such

submittals.

(e) Contractor shall not be responsible for the adequacy of the performance or design criteria specified by PWC.

Article VIII. PWC's Responsibilities

(a) In awarding the bid to Contractor and executing the applicable Agreement, PWC acknowledges the following responsibilities:

(i) Except as otherwise provided in these General Conditions, PWC shall issue all communications directly to Contractor or its designee.
(ii) PWC may at its discretion replace Design Engineer and Project Engineer. The replacement Design Engineer or Project Engineer's status under the Contract Documents shall be that of the former Design Engineer or Project Engineer.
(iii) PWC shall promptly furnish the data required of PWC under the Contract Documents.
(iv) PWC shall make payments to Contractor when they are due as provided in the Contract Documents.
(v) PWC shall not supervise, direct, or have control or authority over, nor be responsible for, Contractor's means, methods, techniques, sequences, or procedures of construction, or the safety precautions and programs incident thereto, or for any failure of Contractor to comply with Laws and Regulations applicable to the performance of the Work. PWC will not be responsible for Contractor's failure to perform the Work in accordance with the Contract Documents.
(vi) Upon request of Contractor, PWC shall furnish to Contractor reasonable evidence that financial arrangements have been made to satisfy PWC's obligations under the Contract Documents (including obligations under proposed changes in the Work).
(vii) While at the Site, PWC's employees and representatives shall comply with the specific applicable requirements of Contractor's safety programs of which PWC has been informed.
(viii) PWC shall furnish copies of any applicable PWC safety program(s) to Contractor, which Contractor shall review and implement.

Article IX. Amending the Contract Documents; Changes in the Work

Section 9.01 <u>Amending and Supplementing Contract Documents</u>

(a) The Contract Documents may be amended or supplemented by a Change Order, a Work Change Directive, or a Field Order.

(i) Change Orders: If an amendment or supplement to the Contract Documents includes a change in the Contract Price or the Contract Times, such amendment or supplement must be set forth in a Change Order. A Change Order also may be used to establish amendments and supplements of the Contract Documents that do not affect the Contract Price or Contract Times.

(ii) Work Change Directives: A Work Change Directive will not change the Contract Price or the Contract Times, but is evidence that the parties expect that the modification ordered or documented by a Work Change Directive will be incorporated in a subsequently issued Change Order, following negotiations by the parties as to the Work Change Directive's effect, if any, on the Contract Price and Contract Times; or, if negotiations are

unsuccessful, by a determination under the terms of the Contract Documents governing adjustments, expressly including Paragraph 9.04 regarding change of Contract Price. Contractor must submit any Change Proposal seeking an adjustment of the Contract Price or the Contract Times, or both, no later than 30 days after the completion of the Work set out in the Work Change Directive. PWC must submit any dispute or request seeking an adjustment of the Contract Price or the Contract Times, or both, no later than 60 days after issuance of the Work Change Directive.

(iii) Field Orders: Project Engineer may authorize minor changes in the Work if the changes do not involve an adjustment in the Contract Price or the Contract Times and are compatible with the design concept of the completed Project as a functioning whole as indicated by the Contract Documents. Such changes will be accomplished by a Field Order and will be binding on PWC and on Contractor, which shall perform promptly the Work involved. If Contractor believes that a Field Order justifies an adjustment in the Contract Price or Contract Times, or both, then before proceeding with the Work at issue, Contractor shall submit a Change Proposal as provided herein.

Section 9.02 PWC-Authorized Changes in the Work

(a) Without invalidating the Agreement and without notice to any surety, PWC may, at any time or from time to time, order additions, deletions, or revisions in the Work. Such changes shall be supported by Design Engineer's recommendation when applicable and to the extent the change involves the design (as set forth in the Drawings, Specifications, or otherwise), or other engineering or technical matters. Such changes may be accomplished by a Change Order or by a Work Change Directive. Upon receipt of any such document, Contractor shall promptly proceed with the Work as revised. Nothing in this paragraph shall obligate Contractor to undertake work that Contractor reasonably concludes cannot be performed in a manner consistent with Contractor's safety obligations under the Contract Documents or Laws and Regulations.

Section 9.03 Unauthorized Changes in the Work

(a) Contractor shall not be entitled to an increase in the Contract Price or an extension of the Contract Times with respect to any work performed that is not required by the Contract Documents, as amended, modified, or supplemented.

Section 9.04 Change of Contract Price

(a) The Contract Price may only be changed by a Change Order. Any Change Proposal for an adjustment in the Contract Price shall comply with the provisions of these General Conditions.

(b) An adjustment in the Contract Price will be determined as follows:

(i) where the Work involved is covered by unit prices contained in the Contract Documents, then by application of such unit prices to the quantities of the items involved; or
(ii) where the Work involved is not covered by unit prices contained in the Contract Documents, then by a mutually agreed lump sum (which may include an allowance for overhead and profit as agreed to in writing by the Parties); or
(iii) where the Work involved is not covered by unit prices contained in the Contract Documents and the Parties do not reach mutual agreement to a lump sum, then on the basis of the Cost of the Work plus a reasonable Contractor's fee for overhead and profit.

(c) Contractor's Fee: When applicable, the Contractor's fee for overhead and profit shall be determined as follows:

(i) a mutually acceptable fixed fee; or
(ii) if a fixed fee is not agreed upon, then a fee based on the following percentages of the various portions of the Cost of the Work:

1) for unit prices, the Contractor's fee shall be fifteen percent (15%);
2) for all other costs incurred, the Contractor's fee shall be five percent (5%);
3) the amount of credit to be allowed by Contractor to PWC for any change that results in a net decrease in the Contract Price will be the amount of the actual net decrease in cost plus a deduction in Contractor's fee by an amount equal to five percent of such net decrease; and
4) when both additions and credits are involved in any one change, the adjustment in Contractor's fee shall be computed on the basis of the net change.

Section 9.05 Change of Contract Times

(a) The Contract Times may only be changed by a Change Order. Any Change Proposal for an adjustment in the Contract Times shall comply with the provisions of Paragraph 9.06.

(b) An adjustment of the Contract Times shall be subject to the limitations set forth in these Contract Document as it concerns delays in Contractor's progress.

Section 9.06 Change Proposals

(a) Contractor shall submit a Change Proposal to PWC to request an adjustment in the Contract Times and/or Contract Price. The Change Proposal shall specify any proposed change in Contract Times or Contract Price, or both, or other proposed relief, and explain the reason for the proposed change, with citations to any governing or applicable provisions of the Contract Documents.

(i) Procedures: Contractor shall submit each Change Proposal to PWC promptly (but in no event later than 30 days) after the start of the event giving rise thereto, or after such initial decision. The Contractor shall submit supporting data, including the proposed change in Contract Price or Contract Time (if any), to PWC within 15 calendar days after the submittal of the Change Proposal. The supporting data shall be accompanied by a written statement that the supporting data are accurate and complete, and that any requested time or price adjustment is the entire adjustment to which Contractor believes it is entitled as a result of said event.
(ii) PWC Action: PWC will review each Change Proposal and, within 30 calendar days after receipt of the Contractor's supporting data, either deny the Change Proposal in whole, approve it in whole, or deny it in part and approve it in part. Such actions shall be in writing to Contractor. If PWC does not take action on the Change Proposal within 30 calendar days, then the Change Proposal is deemed denied, thereby commencing the time for appeal under these General Conditions.
(iii) Binding Decision: PWC's decision will be final and binding unless Contractor appeals the decision.

Section 9.07 Execution of Change Orders

(a) PWC and Contractor shall execute appropriate Change Orders covering:

(i) changes in the Contract Price or Contract Times that are agreed to by the parties, including any undisputed sum or amount of time for Work performed in accordance with a Work Change Directive;
(ii) changes in Contract Price resulting from a PWC set-off, unless Contractor has duly contested such set-off;
(iii) changes in the Work which are: (a) ordered by PWC, (b) required because of PWC's acceptance of defective Work or PWC's correction of defective Work, or (c) agreed to by the parties, subject to the need for Design Engineer's recommendation if the change in the Work involves the design (as set forth in the Contract Documents), or other engineering or technical matters; and
(iv) changes in the Contract Price or Contract Times, or other changes, which embody the substance of any final and binding results.

(b) If PWC or Contractor refuses to execute a Change Order that is required to be executed under the terms of this Section, it shall be deemed to be of full force and effect as if fully executed.

Section 9.08 Notification to Surety

(a) If the provisions of any bond require notice to be given to a surety of any change affecting the general scope of the Work or the provisions of the Contract Documents (including, but not limited to, Contract Price or Contract Times), the giving of any such notice will be Contractor's responsibility. The amount of each applicable bond will be adjusted to reflect the effect of any such change.

Article X. Tests, Inspections, and Approvals; Correction, Removal, or Acceptance of Defective Work

Section 10.01 Access to Work

(a) PWC, Design Engineer, their consultants and other representatives and personnel of PWC, independent testing laboratories, and authorities having jurisdiction will have access to the Site and the Work at reasonable times for their observation, inspection, and testing. Contractor shall provide them proper and safe conditions for such access and advise them of Contractor's safety procedures and programs so that they may comply therewith as applicable.

Section 10.02 Tests, Inspections, and Approvals

(a) Contractor shall give Project Engineer timely notice of readiness of the Work (or specific parts thereof) for all required inspections and tests and shall cooperate with inspection and testing personnel to facilitate required inspections and tests.

(b) PWC shall retain and pay for the initial services of an independent inspector, testing laboratory, or other qualified individual or entity to perform all inspections and tests expressly required by the Contract Documents to be furnished and paid for by PWC, except those costs incurred in connection with tests or inspections of covered Work shall

be governed by the provisions of Paragraph 10.05.

(c) If Laws or Regulations of any public body having jurisdiction require any Work (or part thereof) specifically to be inspected, tested, or approved by an employee or other representative of such public body, Contractor shall assume full responsibility for arranging and obtaining such inspections, tests, or approvals, pay all costs in connection therewith, and furnish the required certificates of inspection or approval to PWC.

(d) Contractor shall be responsible for arranging, obtaining, and paying for all inspections and tests required:

(i) by the Contract Documents, unless the Contract Documents expressly allocate responsibility for a specific inspection or test to PWC;
(ii) to attain PWC's and Design Engineer's acceptance of materials or equipment to be incorporated in the Work;
(iii) by manufacturers of equipment furnished under the Contract Documents;
(iv) for testing, adjusting, and balancing of mechanical, electrical, and other equipment to be incorporated into the Work; and
(v) for acceptance of materials, mix designs, or equipment submitted for approval prior to Contractor's purchase thereof for incorporation in the Work.

Such inspections and tests shall be performed by independent inspectors, testing laboratories, or other qualified individuals or entities acceptable to PWC, as confirmed in writing by Project Engineer to Contractor.

(e) If the Contract Documents require the Work (or part thereof) to be approved by PWC or its designee, then Contractor shall assume full responsibility for arranging and obtaining such approvals.

(f) If any Work (or the work of others) that is to be inspected, tested, or approved is covered by Contractor without written concurrence of Project Engineer, Contractor shall, if requested by Project Engineer, uncover such Work for observation. Such uncovering shall be at Contractor's expense unless Contractor had given PWC timely notice of Contractor's intention to cover the same and PWC had not acted with reasonable promptness in response to such notice.

Section 10.03 Defective Work

(a) It is Contractor's obligation to assure that the Work is not defective.

(b) PWC or its designee has the authority to determine whether Work is defective, and to reject defective Work.

(c) Prompt notice of all defective Work of which PWC has actual knowledge will be given to Contractor.

(d) Promptly after receipt of written notice of defective Work, Contractor shall correct all such defective Work, whether or not fabricated, installed, or completed, or, if PWC has rejected the defective Work, remove it from the Project and replace it with Work that is not defective.

(e) When correcting defective Work, Contractor shall take no action that would void or otherwise impair PWC's special warranty and guarantee, if any, on said Work.

(f) In addition to its correction, removal, and replacement obligations with respect to defective Work, Contractor shall pay all claims, costs, losses, and damages arising out of or relating to defective Work, including but not limited to the cost of the inspection, testing, correction, removal, replacement, or reconstruction of such defective Work, fines levied against PWC by governmental authorities because the Work is defective, and the costs of repair or replacement of work of others resulting from defective Work. Prior to final payment, if PWC and Contractor are unable to agree as to the measure of such claims, costs, losses, and damages resulting from defective Work, then PWC may impose a reasonable set-off against payments due.

Section 10.04 Acceptance of Defective Work

(a) If, instead of requiring correction or removal and replacement of defective Work, PWC prefers to accept it, PWC may do so (subject, if such acceptance occurs prior to final payment, to Design Engineer's confirmation that such acceptance is in general accord with the design intent and applicable engineering principles and will not endanger public safety).

(b) Contractor shall pay all claims, costs, losses, and damages attributable to PWC's evaluation of and determination to accept such defective Work (such costs to be approved by PWC as to reasonableness), and for the diminished value of the Work to the extent not otherwise paid by Contractor. If any such acceptance occurs prior to final payment, the necessary revisions in the Contract Documents with respect to the Work shall be incorporated in a Change Order.

(c) If the parties are unable to agree as to the decrease in the Contract Price, reflecting the diminished value of Work so accepted, then PWC may impose a reasonable set-off against payments due. If the acceptance of defective Work occurs after final payment, Contractor shall pay an appropriate amount to PWC.

Section 10.05 Uncovering Work

(a) PWC has discretion to require, at its initial cost, additional inspection or testing of the Work, whether or not the Work is fabricated, installed, or completed.

(b) If any Work is covered contrary to the written request of PWC, then Contractor shall, if requested by PWC or its designee, uncover such Work for observation, and then replace the covering, all at Contractor's expense.

(c) If PWC considers it necessary or advisable that covered Work be observed by PWC or inspected or tested by others, then Contractor, at PWC's request, shall uncover, expose, or otherwise make available for observation, inspection, or testing as PWC may require, that portion of the Work in question, and provide all necessary labor, material, and equipment.

(i) If it is found that the uncovered Work is defective, Contractor shall be responsible for all claims, costs, losses, and damages arising out of or relating to such uncovering, exposure, observation, inspection, and testing, and of satisfactory replacement or reconstruction (including but not limited to all costs of repair or replacement of work of others); and pending Contractor's full discharge of this responsibility PWC shall be entitled to impose a reasonable set-off against payments due.

(ii) If the uncovered Work is not found to be defective, Contractor shall be allowed an increase in the Contract Price or an extension of the Contract Times, or both, directly attributable to such uncovering, exposure, observation, inspection, testing, replacement, and reconstruction. If the parties are unable to agree as to the amount or extent thereof, then Contractor may submit a Change Proposal within 30 calendar days of the determination that the Work is not defective.

Section 10.06 PWC May Stop the Work

(a) If the Work is defective, or Contractor fails to supply sufficiently skilled workers or suitable materials or equipment, or fails to perform the Work in such a way that the completed Work will conform to the Contract Documents, then PWC may order Contractor to stop the Work, or any portion thereof, until the cause for such order has been eliminated; however, this right of PWC to stop the Work shall not give rise to any duty on the part of PWC to exercise this right for the benefit of Contractor, any Subcontractor, any Supplier, any other individual or entity, or any surety for, or employee or agent of any of them.

Section 10.07 PWC May Correct Defective Work

(a) If Contractor fails within the time specified by PWC in a written notice from PWC to correct defective Work, or to remove and replace rejected Work as required by PWC, or if Contractor fails to perform the Work in accordance with the Contract Documents, or if Contractor fails to comply with any other provision of the Contract Documents, then PWC may, after seven (7) calendar days written notice to Contractor, correct or remedy any such deficiency.

(b) In exercising the rights and remedies under this Section, PWC shall proceed expeditiously. In connection with such corrective or remedial action, PWC may exclude Contractor from all or part of the Site, take possession of all or part of the Work and suspend Contractor's services related thereto, and incorporate in the Work all materials and equipment stored at the Site or for which PWC has paid Contractor but which are stored elsewhere. Contractor shall allow PWC and its officers, employees, representatives, agents and other contractors, and Design Engineer and its employees and agents access to the Site to enable PWC to exercise the rights and remedies under this Section.

(c) All claims, costs, losses, and damages incurred or sustained by PWC in exercising the rights and remedies under this Section will be charged against Contractor as set-offs against payments due. Such claims, costs, losses and damages will include but not be limited to all costs of repair, or replacement of work of others destroyed or damaged by correction, removal, or replacement of Contractor's defective Work.

(d) Contractor shall not be allowed an extension of the Contract Times because of any delay in the performance of the Work attributable to the exercise by PWC of PWC's rights and remedies under this Section.

Article XI. Claims

Section 11.01 Claims Process

(a) The following disputes between PWC and Contractor shall be submitted to the Claims process set forth in this Article:

(i) Appeals by PWC or Contractor of Design Engineer's decisions regarding Change Proposals;
(ii) PWC or Contractor's demands for adjustments in the Contract Price or Contract Times, or other relief under the Contract Documents; and
(iii) Disputes that Design Engineer has been unable to address because they do not involve the design (as set forth in the Contract Documents), the acceptability of the Work, or other engineering or technical matters.

Section 11.02 Submittal of Claim

(a) The party submitting a claim shall deliver it directly to the other party to the Agreement promptly (but in no event later than 30 calendar days) after the start of the event giving rise thereto; in the case of appeals regarding Change Proposals within 30 calendar days of the decision under appeal. The responsibility to substantiate a claim shall rest with the party making the claim. In the case of a claim by Contractor seeking an increase in the Contract Times or Contract Price, or both, Contractor shall certify that the claim is made in good faith, that the supporting data are accurate and complete, and that to the best of Contractor's knowledge and belief the amount of time or money requested accurately reflects the full amount to which Contractor is entitled.

Section 11.03 Review and Resolution

(a) The party receiving a Claim shall review it thoroughly, giving full consideration to its merits. The two parties shall seek to resolve the Claim through the exchange of information and direct negotiations. The parties may extend the time for resolving the Claim by mutual agreement. All actions taken on a Claim shall be stated in writing and submitted to the other party.

Section 11.04 Dispute Resolution

(a) In the event of any dispute, controversy, or claim of any kindor nature arising under or in connection with this Agreement (a "Dispute") and involving any two or more of the following parties, PWC, Design Engineer, Contractor or any subcontractor of Contractor, the party initiating the Dispute shall serve written notice of a Dispute on the party(ies) to the dispute, and those parties shall endeavor to settle the dispute first through direct, informal discussions between the parties' selected representatives. Any such representative(s) shall have binding authority to settle the Dispute. In the event the parties do not settle the Dispute within ten (10) calendar days from the date of written notice of the Dispute, any party to the Dispute may, by written notice to the other party(ies), engage a mediator certified under the laws of the State of North Carolina to mediate the Dispute within thirty (30) calendar days of such notice. The parties to the Dispute shall attend mediation in good faith. In the event mediation is unsuccessful, any party to the dispute may initiate arbitration proceedings. Any controversy or claim arising out of or relating to the Contract Documents, or the breach thereof, shall be settled by binding arbitration administered by the American Arbitration Association under its Construction Industry Arbitration Rules, and judgment on the award rendered by the arbitrator(s) may be entered in any court having jurisdiction thereof. All of the foregoing dispute resolution procedures shall be held in Cumberland County, North Carolina. The costs of the mediator and arbitrator in a dispute resolution process shall be divided equally among the parties to the process; provided, however, PWC shall bear at least one-third of the cost if PWC is a party to the dispute resolutionand the remainder of the cost shall be divided equally among the other parties

participating in the dispute resolution. PWC shall, in its contractual arrangements with Design Engineer, and Contractor shall, in its contracts with Subcontractors and they in their contracts with lower-tier subcontractors authorize and direct such parties to participate in the dispute resolution procedures set forth in this Section. Unless otherwise directed in writing by PWC, Contractor shall continue the Project and maintain compliance with the scheduling deadlines set forth in theContract Documents during any dispute resolution proceedings. If Contractor continues to perform, PWC shall make payments due for the continued performance in accordance with this Agreement. The provisions of this Section shall not extend any applicable statutes of limitation or repose.

Article XII. Payments to Contractor; Set-Offs; Completion; Correction Period

Section 12.01 Progress Payments

(a) The Schedule of Values will serve as the basis for progress payments and will be incorporated into a form of Application for Payment acceptable to the Project Engineer. Progress payments on account of Unit Price Work will be based on the number of units completed during the pay period. Progress payments for cost-based Work will be based on the Cost of the Work completed by the Contractor during the pay period.

(b) Applications for Payments:

(i) Contractor shall submit to Project Engineer for review an Application for Payment filled out and signed by Contractor covering the Work completed as of the date of the Application and accompanied by such supporting documentation as is required by the Contract Documents. If payment is requested on the basis of materials and equipment not incorporated in the Work but delivered and suitably stored at the Site or another location agreed to in writing, the Application for Payment shall also be accompanied by a bill of sale, invoice, or other documentation warranting that PWC has received the materials and equipment free and clear, and evidence that the materials and equipment are covered by appropriate property insurance, a warehouse bond, or other arrangements to protect PWC's interest.

(ii) Beginning with the second Application for Payment, each Application shall include an affidavit of Contractor stating that all previous progress payments received on account of the Work have been applied on account to discharge Contractor's legitimate obligations associated with prior Applications for Payment.

(iii) The amount of retainage for progress payments will be as stipulated in the Contract Documents.

(c) Review of Applications:

(i) Project Engineer will, within ten (10) Business Days after receipt of each Application for Payment, including each resubmittal, either indicate in writing a recommendation of payment and present the Application to PWC, or return the Application to Contractor indicating in writing Project Engineer's reason(s) for refusing to recommend payment. In the latter case, the Contractor may make the necessary corrections and resubmit the Application.

(ii) Project Engineer's recommendation of any payment requested in an Application for Payment will constitute a representation by Project Engineer to PWC, based on Project Engineer's observations of the executed Work, and on Project Engineer's review of the

Application for Payment and the accompanying data and schedules, that to the best of Project Engineer's knowledge, information, and belief:

1) the Work has progressed to the point indicated;
2) the quality of the Work is generally in accordance with the Contract Documents (subject to an evaluation of the Work as a functioning whole prior to or upon Substantial Completion, the results of any subsequent tests called for in the Contract Documents, a final determination of quantities and classifications for Unit Price Work, and any other qualifications stated in the recommendation); and
3) the conditions precedent to Contractor's being entitled to such payment appear to have been fulfilled in so far as it is Project Engineer's responsibility to observe the Work.

(iii) By recommending any such payment Project Engineer will not thereby be deemed to have represented that:

1) inspections made to check the quality or the quantity of the Work as it has been performed have been exhaustive, extended to every aspect of the Work in progress, or involved detailed inspections of the Work beyond the responsibilities specifically assigned to Project Engineer in the Contract Documents; or
2) there may not be other matters or issues between the parties that might entitle Contractor to be paid additionally by PWC or entitle PWC to withhold payment to Contractor.

(iv) Neither Project Engineer's review of Contractor's Work for the purposes of recommending payments nor Project Engineer's recommendation of any payment, including final payment, will impose responsibility on Project Engineer:

1) to supervise, direct, or control the Work, or
2) for the means, methods, techniques, sequences, or procedures of construction, or the safety precautions and programs incident thereto, or
3) for Contractor's failure to comply with Laws and Regulations applicable to Contractor's performance of the Work, or
4) to make any examination to ascertain how or for what purposes Contractor has used the money paid on account of the Contract Price.

(v) Project Engineer may refuse to recommend the whole or any part of any payment if, in Project Engineer's opinion, it would be incorrect to make the representations to PWC outlined in this Section.

(d) Project Engineer will recommend reductions in payment (set-offs) necessary in Project Engineer's opinion to protect PWC from loss because:

(i) the Work is defective, requiring correction or replacement;
(ii) the Contract Price has been reduced by Change Orders;
(iii) PWC has been required to correct defective Work or has accepted defective Work in accordance with these General Conditions;
(iv) PWC has been required to remove or remediate a Hazardous Environmental Condition for which Contractor is responsible; or
(v) Project Engineer has actual knowledge of the occurrence of any of the events that would constitute a default by Contractor and therefore justify termination for cause under the Contract Documents.

(e) Payment Becomes Due:

(i) Twenty (20) Business Days after presentation of the Application for Payment to PWC with Project Engineer's recommendation, the amount recommended (subject to any PWC set offs) will become due, and when due will be paid by PWC to Contractor.

(f) Reductions in Payment by PWC:

(i) In addition to any reductions in payment (set-offs) recommended by Project Engineer, PWC is entitled to impose a set-off against payment based on any of the following:

1) PWC has incurred costs, losses, or damages on account of Contractor's conduct in the performance or furnishing of the Work, including but not limited to claims, costs, losses, or damages from workplace injuries, adjacent property damage, non-compliance with Laws and Regulations, and patent infringement;
2) Contractor has failed to take reasonable and customary measures to avoid damage, delay, disruption, and interference with other work at or adjacent to the Site;
3) Contractor has failed to provide and maintain required bonds or insurance;
4) PWC has been required to remove or remediate a Hazardous Environmental Condition for which Contractor is responsible;
5) PWC has incurred extra charges or engineering costs related to submittal reviews, evaluations of proposed substitutes, tests and inspections, or return visits to manufacturing or assembly facilities;
6) the Work is defective, requiring correction or replacement;
7) PWC has been required to correct defective Work or has accepted defective Work in accordance with the Contract Documents;
8) the Contract Price has been reduced by Change Orders;
9) an event that would constitute a default by Contractor and therefore justify a termination for cause has occurred;
10) liquidated damages have accrued as a result of Contractor's failure to achieve Milestones, Substantial Completion, or Completion of the Project; or
11) there are other items entitling PWC to a set off against the amount recommended.

(ii) If PWC imposes any set-off against payment, whether based on its own knowledge or on the written recommendations of Project Engineer, PWC will give Contractor immediate written notice stating the reasons for such action and the specific amount of the reduction, and promptly pay Contractor any amount remaining after deduction of the amount so withheld. PWC shall promptly pay Contractor the amount so withheld, or any adjustment agreed to by PWC and Contractor if Contractor remedies the reasons for such action. The reduction imposed shall be binding on Contractor unless it duly submits a Change Proposal contesting the reduction.

(iii) Upon a subsequent determination that PWC's refusal of payment was not justified, the amount wrongfully withheld shall be treated as an amount due and subject to interest as provided in the Contract Documents.

Section 12.02 Substantial Completion

(a) When Contractor considers the entire Work ready for its intended use Contractor shall notify PWC and Design Engineer in writing that the entire Work is substantially complete and request that PWC acknowledge in writing that Contractor has met Substantial Completion.

(b) Promptly after Contractor's notification, PWC, Contractor, and Design Engineer shall make an inspection of the Work to determine the status of completion. If PWC does not consider the Work substantially complete, PWC will notify Contractor in writing giving the reasons therefor. PWC shall thereafter submit to Contractor an initial draft of punch list items to be completed or corrected before final payment.

(c) If Design Engineer considers the Work substantially complete, Design Engineer will deliver to PWC a preliminary certificate of Substantial Completion which shall fix the date of Substantial Completion. Design Engineer shall attach to the certificate a punch list of items to be completed or corrected before final payment. PWC shall have seven (7) Business Days after receipt of the preliminary certificate to make written objection to Design Engineer as to any provisions of the certificate or attached punch list. If, after considering the objections to the provisions of the preliminary certificate, PWC concludes that the Work is not substantially complete, PWC will, within fourteen (14) calendar days after submission of the preliminary certificate to PWC, notify Contractor in writing that the Work is not substantially complete, stating the reasons therefor.

(d) At the time of receipt of the preliminary certificate of Substantial Completion, PWC and Contractor will confer regarding PWC's use or occupancy of the Work following Substantial Completion, review the builder's risk insurance policy with respect to the end of the builder's risk coverage, and confirm the transition to coverage of the Work under a permanent property insurance policy held by PWC. Unless PWC and Contractor agree otherwise in writing, PWC shall bear responsibility for security, operation, protection of the Work, property insurance, maintenance, heat, and utilities upon PWC use or occupancy of the Work.

(e) After Substantial Completion the Contractor shall promptly begin work on the punch list of items to be completed or corrected prior to final payment and shall complete such items within the time specified by PWC. In appropriate cases Contractor may submit monthly Applications for Payment for completed punch list items, following the progress payment procedures set forth above.

(f) PWC shall have the right to exclude Contractor from the Site after the date of Substantial Completion subject to allowing Contractor reasonable access to remove its property and complete or correct items on the punch list.

Section 12.03 Partial Use or Occupancy

(a) Prior to Substantial Completion of all the Work, PWC may use or occupy any substantially completed part of the Work which has specifically been identified in the Contract Documents, or which PWC, Design Engineer, and Contractor agree constitutes a separately functioning and usable part of the Work that can be used by PWC for its intended purpose without significant interference with Contractor's performance of the remainder of the Work, subject to the following conditions:

(i) At any time PWC may request in writing that Contractor permit PWC to use or occupy any such part of the Work that PWC believes to be substantially complete.

(ii) At any time Contractor may notify PWC and Design Engineer in writing that Contractor considers any such part of the Work substantially complete and request Design Engineer

to issue a certificate of Substantial Completion for that part of the Work.

(iii) Within a reasonable time after either such request, PWC, Contractor, and Design Engineer shall make an inspection of that part of the Work to determine its status of completion. If Design Engineer does not consider that part of the Work to be substantially complete, Design Engineer will notify PWC and Contractor in writing giving the reasons therefor.

(iv) No use or occupancy or separate operation of part of the Work may occur prior to compliance with the requirements regarding builder's risk or other property insurance.

Section 12.04 Final Inspection

(a) Upon written notice from Contractor that Completion of the Project has been achieved or an agreed portion thereof is complete, PWC will promptly make a final inspection with Project Engineer, Design Engineer, and Contractor and will notify Contractor in writing of all particulars in which this inspection reveals that the Work, or agreed portion thereof, is incomplete or defective. Contractor shall immediately take such measures as are necessary to complete such Work or remedy such deficiencies.

Section 12.05 Final Payment

(a) Application for Payment:

(i) After Contractor has, in the opinion of PWC, satisfactorily completed all corrections identified during the final inspection and has delivered, in accordance with the Contract Documents, all maintenance and operating instructions, schedules, guarantees, bonds, certificates or other evidence of insurance, certificates of inspection, annotated record documents, and other documents, Contractor may make application for final payment.

(ii) The final Application for Payment shall be accompanied (except as previously delivered) by:

1) all documentation called for in the Contract Documents;
2) consent of the surety, if any, to final payment;
3) satisfactory evidence that all title issues have been resolved such that title to all Work, materials, and equipment has passed to PWC free and clear or will so pass upon final payment;
4) a list of all disputes that Contractor believes are unsettled; anD
5) complete and legally effective releases or waivers (satisfactory to PWC) required by the Contract Documents.

(iii) If Design Engineer is satisfied that the Work has been completed and Contractor's other obligations under the Contract have been fulfilled, Design Engineer will, within ten (10) Business Days after receipt of the final Application for Payment, indicate in writing Design Engineer's recommendation of final payment and present the Application for Payment to PWC for payment. Such recommendation shall account for any set-offs against payment that are necessary in Design Engineer's opinion to protect PWC from loss for the reasons stated above with respect to progress payments. At the same time Design Engineer will also give written notice to PWC and Contractor that the Work is acceptable and that Completion of the Project has been achieved. Otherwise, Design Engineer will return the Application for Payment to Contractor, indicating in writing the reasons for refusing to recommend final payment, in which case Contractor shall make the necessary corrections and resubmit the Application for Payment.

(iv) Within thirty (30) calendar days after the presentation to PWC of the final Application for

Payment and accompanying documentation, the amount recommended by Design Engineer (less any further sum PWC is entitled to set off against Design Engineer's recommendation, including but not limited to set-offs for liquidated damages and set-offs allowed under the provisions above with respect to progress payments) will become due and shall be paid by PWC to Contractor.

Section 12.06 Waiver of Claims

(a) The making of final payment will not constitute a waiver by PWC of claims or rights against Contractor. PWC expressly reserves claims and rights arising from defective Work appearing after final inspection, from Contractor's failure to comply with the Contract Documents or the terms of any special guarantees specified therein, from Contractor's indemnification obligations, or from Contractor's continuing obligations under the Contract Documents.

(b) The acceptance of final payment by Contractor will constitute a waiver by Contractor of all claims and rights against PWC other than those pending matters that have been duly submitted or appealed under the provisions of the Contract Documents.

Section 12.07 Correction Period

(a) If within one (1) year after the date of Substantial Completion (or such longer period of time as may be prescribed by the terms of any applicable special guarantee required by the Contract Documents, or by any specific provision of the Contract Documents), any Work is found to be defective, or if the repair of any damages to the Site, adjacent areas that Contractor has arranged to use through construction easements or otherwise, and other adjacent areas used by Contractor as permitted by Laws and Regulations, is found to be defective, then Contractor shall promptly, without cost to PWC and in accordance with PWC's written instructions:

(i) correct the defective repairs to the Site or such other adjacent areas;
(ii) correct such defective Work;
(iii) if the defective Work has been rejected by PWC, remove it from the Project and replace it with Work that is not defective, and
(iv) satisfactorily correct or repair or remove and replace any damage to other Work, to the work of others, or to other land or areas resulting therefrom.

(b) If Contractor does not promptly comply with the terms of PWC's written instructions, or in an emergency where delay would cause serious risk of loss or damage, PWC may have the defective Work corrected or repaired or may have the rejected Work removed and replaced. Contractor shall pay all claims, costs, losses, and damages (including but not limited to all fees and charges of engineers, architects, attorneys, and other professionals and all court or arbitration or other dispute resolution costs) arising out of or relating to such correction or repair or such removal and replacement (including but not limited to all costs of repair or replacement of work of others).

(c) In special circumstances where a particular item of equipment is placed in continuous service before Substantial Completion of all the Work, the correction period for that item may start to run from an earlier date only as provided in the Contract Documents.

(d) Where defective Work (and damage to other Work resulting therefrom) has been corrected or removed and replaced under this Article XII, the correction period hereunder with

respect to such Work will be extended for an additional period of one year after such correction or removal and replacement has been satisfactorily completed.

(e) Contractor's obligations under this Article XII are in addition to all other obligations and warranties. The provisions of this Article XII shall not be construed as a substitute for, or a waiver of, the provisions of any applicable statute of limitation or repose.

Article XIII. Suspension of Work and Termination

Section 13.01 PWC May Suspend Work

(a) At any time and without cause, PWC may suspend the Work or any portion thereof for a period of not more than 90 consecutive calendar days by written notice to Contractor and Design Engineer. Such notice will fix the date on which Work will be resumed. Contractor shall resume the Work on the date so fixed. Contractor shall be entitled to an adjustment in the Contract Price or an extension of the Contract Times, or both, directly attributable to any such suspension. Any Change Proposal seeking such adjustments shall be submitted no later than thirty (30) calendar days after the date fixed for resumption of Work.

Section 13.02 PWC May Terminate for Cause

(a) The occurrence of any one or more of the following events will constitute a default by Contractor and justify termination for cause:

(i) Contractor's continued failure to perform the Work in accordance with the Contract Documents (including, but not limited to, failure to supply sufficient skilled workers or suitable materials or equipment or failure to adhere to the Progress Schedule);
(ii) Failure of Contractor to perform or otherwise to comply with a material term of the Contract Documents;
(iii) Contractor's disregard of Laws or Regulations of any public body having jurisdiction; or
(iv) Contractor's repeated disregard of the authority of PWC, Project Engineer, or Design Engineer.

(b) If one or more of the events identified in Paragraph 13.02(a) occurs, then after giving Contractor (and any surety) ten (10) calendar days written notice that PWC is considering a declaration that Contractor is in default and termination of the Agreement, PWC may proceed to:

(i) declare Contractor to be in default, and give Contractor (and any surety) notice that the Contract is terminated; and
(ii) enforce the rights available to PWC under any applicable performance bond.

(c) Subject to the terms and operation of any applicable performance bond, if PWC has terminated the Contract for cause, PWC may exclude Contractor from the Site, take possession of the Work, incorporate in the Work all materials and equipment stored at the Site or for which PWC has paid Contractor but which are stored elsewhere, and complete the Work as PWC may deem expedient.

(d) PWC may not proceed with termination of the Contract under Paragraph 13.02(b) if Contractor within seven (7) calendar days of receipt of notice of intent to terminate begins to correct its failure to perform and proceeds diligently to cure such failure and such efforts

are agreed to by PWC.

(e) If PWC proceeds as provided in Paragraph 13.02(b), Contractor shall not be entitled to receive any further payment until the Work is completed. If the unpaid balance of the Contract Price exceeds the cost to complete the Work, including all related claims, costs, losses, and damages (including but not limited to all fees and charges of engineers, architects, attorneys, and other professionals) sustained by PWC, such excess will be paid to Contractor. If the cost to complete the Work including such related claims, costs, losses, and damages exceeds such unpaid balance, Contractor shall pay the difference to PWC. Such claims, costs, losses, and damages incurred by PWC will be reviewed by PWC as to their reasonableness and, when so approved by PWC, incorporated in a Change Order.

(f) Where Contractor's services have been so terminated by PWC, the termination will not affect any rights or remedies of PWC against Contractor then existing or which may thereafter accrue, or any rights or remedies of PWC against Contractor or any surety under any payment bond or performance bond. Any retention or payment of money due Contractor by PWC will not release Contractor from liability.

(g) The provisions of any applicable payment or performance bond shall govern over any inconsistent provisions of this Section.

Section 13.03 PWC May Terminate For Convenience

(a) Upon seven (7) calendar days written notice to Contractor, PWC may, without cause and without prejudice to any other right or remedy of PWC, terminate the Contract. In such case, Contractor shall be paid for (without duplication of any items):

(i) completed and acceptable Work executed in accordance with the Contract Documents prior to the effective date of termination, including fair and reasonable sums for overhead and profit on such Work;
(ii) expenses sustained prior to the effective date of termination in performing services and furnishing labor, materials, or equipment as required by the Contract Documents in connection with uncompleted Work, plus fair and reasonable sums for overhead and profit on such expenses; and
(iii) other reasonable expenses directly attributable to termination, including costs incurred to prepare a termination for convenience cost proposal.

(b) Contractor shall not be paid on account of loss of anticipated overhead, profits, or revenue, or other economic loss arising out of or resulting from such termination.

Section 13.04 Contractor May Stop Work or Terminate

(a) If, through no act or fault of Contractor, (1) the Work is suspended for more than ninety (90) consecutive calendar days by PWC or under an order of court or other public authority or (2) PWC fails for sixty (60) calendar days to pay Contractor any sum finally determined to be due, then Contractor may, upon seven (7) calendar days written notice to PWC, and provided PWC does not remedy such suspension or failure within that time, terminate the Contract and recover from PWC payment on the same terms as provided in this Article.
(b) In lieu of terminating the Contract and without prejudice to any other right or remedy, if PWC has failed for thirty (30) calendar days to pay Contractor any sum finally determined to be due, Contractor may, seven (7) calendar days after written notice to PWC, stop the Work until payment is made of all such amounts due Contractor, including interest thereon.

The provisions of this paragraph are not intended to preclude Contractor from submitting a Change Proposal for an adjustment in Contract Price or Contract Times or otherwise for expenses or damage directly attributable to Contractor's stopping the Work as permitted by this paragraph.

Section 13.05 Morality

(a) If, in the sole opinion of PWC, at any time Contractor or any of its owner(s) or employee(s) or agent(s) (each party, owner, employee, and agent is an "Actor") engages in any one or more actions that bring disrepute, contempt, scandal, or public ridicule to the Actor or subject the Actor to prosecution or offend the community or public morals or decency or denigrate individuals or groups in the community served by PWC or are scandalous or inconsistent with community standards or good citizenship or may adversely affect PWC's finances, public standing, image, or reputation or are embarrassing or offensive to PWC or may reflect unfavorably on PWC or are derogatory or offensive to one or more employee(s) or customer(s) of PWC, PWC may immediately upon written notice to Contractor terminate the Agreement, in addition to any other rights and remedies that PWC may have pursuant to the Contract Documents or at law or in equity.

Article XIV. Miscellaneous

Section 14.01 Additional General Terms and Conditions

(a) Contractor shall be subject to any additional terms and conditions for this Project as set forth in the applicable Appendices as specific in the Agreement, which is incorporated by reference as if set forth word-for-word herein.

Section 14.02 Giving Notice

(a) Whenever any provision of the Contract Documents requires the giving of written notice, it will be deemed to have been validly given if:

(i) delivered in person, by a commercial courier service or otherwise, to the individual or to a member of the firm or to an officer of the corporation for which it is intended;
(ii) delivered at or sent by registered or certified mail, postage prepaid, to the last business address known to the sender of the notice; or
(iii) sent to PWC or Contractor's designee(s) via email, with a confirmation of receipt.

Section 14.03 Computation of Times

(a) When any period of time is referred to in the Contract by days, it will be computed to exclude the first and include the last day of such period. If the last day of any such period falls on a Saturday or Sunday or on a day made a legal holiday by the law of the applicable jurisdiction, such day will be omitted from the computation.

Section 14.04 Cumulative Remedies

(a) The duties and obligations imposed by these General Conditions and the rights and remedies available hereunder to the parties are in addition to, and are not to be construed in any way as a limitation of, any rights and remedies available to any or all of them which

are otherwise imposed or available by Laws or Regulations, by special warranty or guarantee, or by other provisions of the Contract Documents. The provisions of this paragraph will be as effective as if repeated specifically in the Contract Documents in connection with each particular duty, obligation, right, and remedy to which they apply.

Section 14.05 Limitation of Damages

(a) With respect to any and all Change Proposals, Claims, disputes subject to final resolution, and other matters at issue, neither PWC nor Design Engineer, nor any of their officers, directors, members, partners, employees, agents, consultants, or subcontractors, shall be liable to Contractor for any claims, costs, losses, or damages sustained by Contractor on or in connection with any other project or anticipated project.

Section 14.06 No Waiver

(a) A party's non-enforcement of any provision shall not constitute a waiver of that provision, nor shall it affect the enforceability of that provision or any other provision of the Contract Documents.

Section 14.07 Survival of Obligations

(a) All representations, indemnifications, warranties, and guarantees made in, required by, or given in accordance with the Contract Documents, as well as all continuing obligations indicated in the Contract Documents, will survive final payment, completion, and acceptance of the Work or termination or completion of the Agreement or termination of the services of Contractor.

Section 14.08 Controlling Law

(a) The Agreement shall be governed by the law of the State of North Carolina.

Section 14.09 Headings

(a) Article and paragraph headings, numbers, and letters are inserted for convenience only and do not constitute parts of these General Conditions.

SECTION C - ADMINISTRATIVE PROVISIONS

DIVISION 1
01000 – SUPPLEMENTAL CONDITIONS

GENERAL

These Supplemental Conditions are intended to supplement and amplify the Contract Documents regarding the Work.

1. Summary

This project consists of rehabilitating/replacing existing water mains utilizing an epoxy resin lining system and/or open cut replacement. Work shall include installation of a temporary bypass system, pre-inspection of the mains to be lined, replacement of existing water services, replacement of water mains as directed by Fayetteville Public Works Commission, cleaning the existing main, installation of the liner, post-inspection of the lined mains, and all other items necessary to provide a complete job.

Water mains identified by Fayetteville Public Works Commission as needing rehabilitating will be cleaned and televised by the Contractor to facilitate the proper installation of the rehabilitation system(s). Water mains will be videoed to verify that conditions are acceptable for the application of the rehabilitation system. Before lining, the Contractor shall provide Fayetteville Public Works Commission with a copy of the pre-lining video, in digital format. Upon completion of the work, the Contractor will televise the line and provide a copy of the post-lining video and output report to Fayetteville Public Works Commission for verification that the work has been properly completed and is acceptable to Fayetteville Public Works Commission.

All work shall be done in accordance with the terms and conditions outlined herein, Fayetteville Public Works Commission (PWC) "Manual for the Design and Construction of Water and Wastewater System Extensions" (most recent edition), in accordance with the NCDOT Standard Specifications for Roads and Structures (most recent edition), and subject to final approval and acceptance by Fayetteville Public Works Commission.

2. Stored Materials

There will be no payment for stored materials on this project.

3. Materials

All materials to be utilized are to be in new condition. Materials are to be stored in strict accordance with the manufacturer's directions. Materials are to be of the type and brand specified within these Contract Documents. **No alternative or substitute materials shall be considered prior to award of the Contract.**

The Contractor shall submit all requests to utilize materials other than specified to the Fayetteville Public Works Commission for review. The Contractor shall be responsible for providing all required documentation necessary for the Fayetteville Public Works Commission to review and make a determination if the substitute material meets the required specification.

The Contractor will be responsible for providing documented proof that the proposed substitution has a proven record of performance when used in the intended application as confirmed by actual field test(s) or by successful installations. The Fayetteville Public Works Commission reserves the right to reject any such proposed changes or substitutions at their sole discretion, and is under no obligation to justify their decision.

4. Weight/Quantity Tickets

Weigh/quantity tickets shall be required for those Contract quantities that are not measured in

place, including but not limited to select material and undercut excavation. Work of this nature requires the Project Engineer or Project Coordinator's approval prior to beginning or the Project Engineer reserves the right not to pay for unauthorized work.

All quantity tickets for items not measurable in place shall be submitted to the Project Coordinator. Each ticket shall indicate the date, Contractor, job location, name of project, quantity of material, truck number and signature of the Contractor. The Contractor shall furnish the tickets to the Project Coordinator by the end of the next working day. No tickets shall be accepted after that time unless otherwise authorized by Project Engineer.

When a material is to be paid for on a per ton basis (i.e, material for undercut excavation), the weighing devices shall be certified by the N.C. Department of Agriculture. All scales shall be operated by a public weigh master licensed in accordance with the North Carolina General Statues. A certified weigh certificate shall be issued for each load and contain the following information:

1. Project
2. Date
3. Time issued
4. Type of material
5. Gross weight (tons)
6. Tare weight
7. Net weight of material
8. Quarry or plant location
9. Truck number
10. Contractor's name
11. Public Weigh Master's stamp or number
12. Public Weigh Master's signature or initials in ink

The Project Engineer and/or the Project Coordinator may direct the Contractor to re-weigh the contents of any truck load that is delivered to the project on approved platform scales at no additional cost to the Owner.

When material is to be paid for on per cubic yard basis (i.e., select backfill), the payment shall be based on 75% of the gross volume of the truck(s) hauling the material. The truck ticket shall include the gross volume of the truck.

*** END OF SECTION ***

DIVISION I
01025 – MEASUREMENT AND PAYMENT

GENERAL

The purpose of this Section is to define the methods of measurement and payment for each of the unit prices and/or lump sum prices listed in the Bid Form, which are required to construct the Work.

The unit price and/or lump sum price bid shall be full compensation for the work required under each bid item, which shall include all incidental costs relative thereto. Certain items of work are specified and/or shown as a detail in the Contract Documents; bid prices shall include all items of work required to furnish and/or install each in accordance with the Project requirements, whether specifically stated or itemized in the Measure and Payment description.

No payment will be made for stored materials.

INCIDENTAL ITEMS

1.01 Mobilization and Demobilization

A mobilization pay item is included for all initial costs incurred prior to beginning work on this contract, including permits, licenses, fees, insurance, bonds, etc., as well as to mobilize personnel and equipment. Payment will be made on a lump sum basis and one time only for the duration of a contract period.

The Contractor will be paid only for mobilizing to the first project of the contract or renewed contract at the unit price bid. The Contractor will not be paid to mobilize from project to project.

For each contract renewal, the Contractor shall submit invoices from the surety and insurance companies, verifying continued bonding and insurance coverage.

If the Contractor completes all assigned projects and completely de-mobilizes from the contract, and work is assigned at a later date, the Contractor will be paid to re-mobilize to the next project at the unit price bid for Mobilization.

1.02 Undercut Excavation

Payment for undercut excavation shall be measured and paid for by the volume in cubic yards of unsuitable material excavated below the bedding limit line of Six (6) inches below the pipe as authorized by the Project Coordinator. Payment shall be based on the width of two (2) feet plus the internal diameter of the pipe and to the authorized additional depth required for proper support of the pipeline. Payment for structures shall be based on the width of two (2) feet plus the external diameter/dimension to the authorized depth required for proper support of the structure.

Payment shall include the costs for all labor, tools, materials and equipment including but not limited to the removal and disposal of unsuitable soil, stone bedding material and all other incidentals necessary to complete the work. No payment for undercut will be made for over excavation by error or where proper dewatering methods are not in place for trench and or excavation stabilization.

1.03 Borrow Excavation (Select Backfill)

Payment under this item shall be measured by cubic yard of select material as defined in PWC Specification Section 02222 – Excavation and Backfilling. The actual quantity considered for payment shall be 75% of the volume indicated on the submitted certified scale ticket. PWC reserves the right to verify the actual amount of material in place. Payment shall be made at the applicable unit price as listed in the Bid Form.

Payment under this item shall include all costs necessary to furnish and install select material necessary to provide proper suitable backfill material compacted and in place as measured. The unit price shall include all costs to acquire, place, and compact select backfill material, removal and proper disposal of unusable material, and all labor, materials, equipment, and incidentals necessary to complete the work. The PWC Project Coordinator shall approve the use of select material within this project's limits.

Borrow excavation material shall be supplied by the Contractor from approved borrow areas located off-site. Materials utilized on-site within the Project limits or free haul limit (defined as a two-mile radius from the project site) will not be considered for payment as borrow excavation.

Disposal of unsuitable and/or suitable excavated material will not be paid for as a separate bid item

1.04 Remove and Replace Concrete Curb and Gutter

Measurement for this line item shall be along the bottom of the gutter near the face of the curb excluding catch basin openings. Payment shall be made at the unit price bid per linear foot as listed in the Bid Form.

Payment shall be full compensation for removing and disposal of existing concrete curb and gutter, furnishing, hauling, and placing all materials, fine grading the subgrade, backfilling behind the curb with topsoil, adding soil amendments, expansion joints, forms, curing and all equipment, tools, labor, and incidentals necessary to complete the work.

1.05 Remove and Replace Asphalt Curb

Measurement for this line item shall be along the gutter, excluding catch basin openings. Payment shall be made at the unit price bid per linear foot as listed in the Bid Form.

Payment shall be full compensation for removing and disposal of existing asphalt curb, furnishing, hauling, and placing all materials, fine grading the subgrade, backfilling behind the curb with topsoil, adding soil amendments, forms, and all equipment, tools, labor, and incidentals necessary to complete the work.

1.06 Asphalt Permanent Pavement Patch X-inch

This item shall be measured by the actual square yards of pavement patch completed and accepted, in place. Payment shall be made at the contract unit price per square yard as listed in the Bid Form.

The permanent pavement patch shall be in accordance with PWC standard detail M.2. The asphalt pavement patch shall be a “full depth thickness”, up to six (6) inches, as required in standard detail M.2. The completed asphalt pavement patch shall have a minimum of eight (8) inches of ABC stone base, regardless of the pavement thickness.

Asphalt permanent pavement patch thickness ranges are as follows:

- 2-inch permanent pavement patch – up to 2” existing pavement thickness

- 4-inch permanent pavement patch – greater than 2” to 4” existing pavement thickness
- 6-inch permanent pavement patch – greater than 4” existing pavement thickness

Maximum payment widths for access pits have been established, regardless of the depth of excavation or type of existing pavement. Payment will be made for a standard size of seven (7) foot by nine (9) foot.

Payment shall also be made for water mains, laterals, and temporary bypass lines. The maximum payment width for installation of new water mains is four (4) feet. The maximum payment width for water laterals and temporary bypass lines is one (1) foot.

Any pavement removed or damaged beyond the limits specified herein, shall be replaced by the Contractor at their own cost.

Payment for furnishing and placing permanent asphalt patch shall include the costs of all labor, materials, tools, and equipment necessary to complete the work which shall include re-cutting (wheel cutting is not allowed) pavement to straight uniform widths parallel and perpendicular to the road and no jagged edges, removal and disposal of asphalt offsite, re-compaction, removing and disposing of excess soil base course, re-compaction of pavement sub grade, placement and compaction of ABC stone base necessary to maintain a minimum of eight (8) inches of ABC regardless of pavement thickness, maintaining the ABC as necessary to maintain stone at pavement grade until removal of stone for paving, adjusting castings as required, tack coat, placing and compacting of asphalt material, reinstating pavement markings, cleanup and all other incidental work as shown on the details.

Asphalt removal other than the re-cutting of the pavement outlined above shall be paid for in the applicable Contract line item (i.e., access pits, install valve, etc.).

The Contractor shall be required to remove asphalt, re-compact base and sub-base, dispose of unsuitable material off-site and re-patch any areas of settlement at no expense to the Owner. Final approval of the asphalt patch shall rest with the appropriate agency.

1.07 Sod

Measurement of this line item will be the actual square yards of sod installed, completed, and accepted. Payment shall be made at the unit price bid per square yard as listed in the Bid Form.

Once construction is completed, the Contractor shall be responsible for fine grading all exposed areas. All exposed areas of the project are to be placed with sod to insure against erosion, in accordance with the Soil Erosion and Sedimentation Control requirements. All sod shall be installed in accordance with PWC Standard Specification 02931 – Sod. Work shall include all costs to prepare the soil, anchoring, placing sod, providing topsoil as necessary, grading, raking, pest and disease control, soil amendments, fertilizing, maintaining, removal and replacement of dying sod, watering, reseeding if required, tack, and all labor, materials, tools, equipment, and incidentals necessary to complete the work. No payment will be made for placing sod in areas outside of easements or rights-of-way disturbed or otherwise damaged by the Contractor.

Stripping of topsoil will not be measured and paid for as a separate bid item. All work shall be included for payment under the applicable items listed in the Bid Form. Work shall include stripping, stockpiling, spreading, leveling, supplemental topsoil, filling, grading and compaction of suitable topsoil along right-of-way and easements.

1.08 Seeding

Measurement of this line item will be the actual square yards of seed placed, completed, and accepted. Payment shall be made at the unit price bid per square yard as listed in the Bid Form.

Payment for seeding shall include all costs for soil preparation, pest control, disease control, anchoring, placing soil amendments, topsoil, grading, raking, seeding, fertilizing, mulching, crimping, watering, protection of turf areas, maintenance, reseeding if required, tack, and other work incidental thereto. No payment will be made for areas outside of permanent and temporary easements and along rights-of-way disturbed by the Contractor's operations.

Stripping of topsoil will not be measured and paid for as a separate bid item. All work shall be included for payment under the applicable items listed in the Bid Form. Work shall include stripping, stockpiling, spreading, leveling, supplemental topsoil, filling, grading and compaction of suitable topsoil along right-of-way and easements.

WATER MAIN CONSTRUCTION ITEMS

2.01 Furnish and Install Water Main

Installation of the ductile iron and/or PVC water main shall be accomplished in accordance with PWC Standard Specifications 02660 Water Distribution. Payment under this item shall include all costs necessary to furnish and install the specified water main in accordance with PWC standards. Work shall include all costs for excavation, backfill, thrust blocking as required, necessary mechanical joint restraints, compaction, fittings, cutting and removal of pavement, proper disposal of unsuitable materials, erosion control, traffic control, cutting, capping and restraining existing water mains to be abandoned, connections to existing water mains (i.e., tapping sleeves and valves, tees, etc.), removing and tapping plugs, testing, disinfection, installation of the pipe at the specified line and grade, bedding material, removal and disposal of excess unsuitable material off site, and all labor, materials, equipment, and incidentals necessary to complete the work. The Contractor shall be responsible for completing the installation, all required compaction testing, proper alignment of the installed main, and all other items related to proper installation. No payment for installation of water main shall be made until all required testing has been satisfactorily completed. Measurement shall be based on the actual linear feet of water main installed, including all necessary fittings.

Payment for asphalt patching shall be made under the "Asphalt Permanent Pavement Patch" line item.

Payment for installation of valves associated with the new water main shall be made under the "Furnish and Install Valve" line item.

Payment for replacing existing water services shall be made under the "Replace Water Services" bid item.

2.02 Furnish and Install Two-Inch PVC Water Main

Installation of the two (2) inch PVC water main shall be accomplished in accordance with PWC Standard Specifications 02660 Water Distribution. Payment under this item shall include all costs necessary to install the specified water main in accordance with PWC standards. Work shall include all costs for excavation, backfill, thrust blocking as required, tracing wire, compaction, fittings, cutting and removal of pavement, proper disposal of unsuitable materials, erosion control, traffic control, cutting, capping and restraining existing water mains to be abandoned, connections to existing water mains (i.e., tapping sleeves and valves, tees, etc.), removing and tapping plugs, testing, disinfection, installation of the pipe at the specified line and

grade, bedding material, removal and disposal of excess unsuitable material off site, and all labor, materials, equipment, and incidentals necessary to complete the work. The Contractor shall be responsible for completing the installation, all required compaction testing, proper alignment of the installed main, and all other items related to proper installation. No payment for installation of water main shall be made until all required testing has been satisfactorily completed.

Measurement shall be based on the actual linear feet of water main installed, including all necessary fittings.

Payment for asphalt patching shall be made under the “Asphalt Permanent Pavement Patch” line item.

Payment for replacing existing water services shall be made under the “Replace Water Services” bid item.

2.03 Furnish and Install Valve

Payment for gate valves shall be measured by actual count, complete, in place, and payment will be made at the applicable unit price bid as listed in the Bid Form. Payment under this item shall include all costs necessary to furnish and install the specified gate valve and valve box, as indicated on the plans. All gate valves shall be installed in accordance with PWC standard details. Work shall include cutting and removal of pavement, removal and disposal of excess unsuitable material off site, excavation, backfill, compaction, installation, valve boxes, concrete protection rings, concrete collars, tracing wire, and all equipment, tools, labor, and incidentals necessary to complete the work.

2.04 Furnish and Install New Fire Hydrant Assembly

Measurement of this line item will the actual count of fire hydrant assemblies installed as specified on the Contract Drawings. Payment will be made at the applicable Contract unit price for furnish and install new fire hydrant as listed on the Bid Form.

Payment for Fire hydrants will be measured by actual count, complete, in place, and payment will be made at the applicable unit price bid as listed in the Bid Form. Payment under this item shall include all costs necessary to furnish and install a new fire hydrant to the proposed location as shown on the plans, in accordance with PWC standards. Work shall include cutting and removal of pavement, concrete collars, gate valves, boxes, concrete protection ring, painting, barrel depth verification, hydrant barrel depth adjustments to finished grade, excavation, backfill, compaction, pipe, fittings, and all equipment, tools, labor, and incidentals necessary to complete the work.

2.05 Remove Fire Hydrant Assembly

Measurement of this line item will the actual count of fire hydrant assemblies removed as specified on the Contract Drawings. Payment will be made at the applicable Contract unit price for remove fire hydrant assembly as listed on the Bid Form.

Payment under this item shall include all costs necessary to remove the existing fire hydrant. Work shall include cutting and removal of pavement, excavation, backfill, compaction, removal of pipe, valve, and fittings, capping of the existing hydrant branch, returning the fire hydrant to PWC, removal and disposal of excess unsuitable material off site, sod all disturbed areas, and all equipment, tools, labor, and incidentals necessary to complete the work.

2.06 Grout Fill Abandoned Water Main

Measurement of this line item will the actual linear feet of water main abandoned as specified on the Contract Drawings. Payment will be made at the applicable Contract unit price for the linear feet of water main abandoned as listed on the Bid Form.

The unit price shall include all costs for dewatering, grouting, plugging and capping the existing pipe and appurtenances, cutting and removal of pavement, removal and disposal of excess unsuitable material off site, excavation, backfill, compaction, and all labor, materials, equipment, and incidentals necessary to complete the work.

Grouting of existing water mains shall not occur before PWC has accepted the new water main and laterals.

2.07 Install Two-Inch Blow-Off Assembly

This item shall be measured by the actual count of two-inch blow-off assemblies installed, complete, and accepted. Payment shall be made at the unit price bid per each as listed in the Bid Form.

All new water mains shall have a two-inch blow-off assembly installed at the end of the main, unless otherwise approved by the PWC Project Engineer. Additionally, the Contractor shall install a two-inch blow-off on existing water mains, as directed by the PWC Project Engineer or PWC Project Coordinator. Payment under this line item include saw cutting, removal, and proper disposal of pavement, excavation, valves, valve boxes, meter boxes, tracing wire, thrust blocks, saddles, concrete protector rings, concrete collar, fittings, pipe, backfill and compaction, and all labor, materials, tools, equipment, and incidentals necessary to furnish a complete installation.

The blow-off assembly shall be in accordance with PWC standards.

2.08 Replace Existing 1” Water Services with Copper

This item shall be measured by the actual count of one inch water services installed, complete, and accepted. Payment shall be made at the unit price bid per each as listed in the Bid Form.

All existing water services shall be replaced, utilizing copper tubing, in accordance with PWC standard detail W.24. Work under this item includes furnishing all new materials, equipment and labor required to replace existing water services. The existing water services shall be removed to the main and be replaced with copper tubing and all required fittings, from the water main to the meter, in accordance with PWC technical specifications and standards. The meter boxes shall be located 18-inches inside the right-of-way, in accordance with PWC standards. All connections to the customer side of the meter shall be completed by the Contractor, utilizing brass fittings.

Work shall include replacement of the existing meter box. Payment under this item shall include all costs necessary to remove the existing service and install the new copper service. Work shall include cutting and removal of pavement, proper disposal of waste, excavation, backfill, compaction, installation, boring the lateral under pavement, connecting the new tailpiece to the customer side, furnishing and installing new meter boxes, corporations, saddles, lock valves, fittings, and all equipment, tools, labor, and incidentals necessary to complete the work.

All services on mains that are being replaced shall be replaced utilizing new corporations and meter boxes.

2.09 Replace Existing 2-inch Water Service

Payment for this item shall be measured by the actual count of new 2-inch water services installed as replacement services. Payment shall be made at the applicable Contract unit price.

The applicable Bid item and the Contract Drawings shall indicate whether the 2-inch water service is domestic or irrigation.

Each 2-inch domestic service includes a meter setter with bypass and shall be installed in accordance with PWC Standard Details W.5 and W.30.

Each 2-inch irrigation service include a meter setter without bypass and shall be installed in accordance with PWC Standard Details W.28 and W.29.

The Bid price shall include all costs for:

Removal – removal of the meter box, meter setter and by bypass assembly (and returning the assembly to PWC), abandonment of the existing lateral, valve, and valve box;

New installation – tapping the water main, (including furnishing and installing saddles and valves), installing the 2-inch service lateral pipe (boring under pavement as required), installing the appropriate new meter box and meter setter assembly, lock valves, and fittings, connecting to the customer side, cutting and removal of pavement, proper disposal of unsuitable materials, proper compaction, and all labor, materials, equipment, and incidentals necessary to complete the work. All materials shall be new.

2.10 Replace Existing 1" Split Water Services with Copper

This item shall be measured by the actual count of one inch split water services installed, complete, and accepted. Payment shall be made at the unit price bid per each as listed in the Bid Form.

All existing one inch split water services shall be replaced, utilizing copper tubing, in accordance with PWC standard detail W.25. Work under this item includes furnishing all new materials, equipment and labor required to replace existing water services. The existing water services shall be removed to the main and be replaced with copper tubing and all required fittings, from the water main to the meter, in accordance with PWC technical specifications and standards. The meter boxes shall be located 18-inches inside the right-of-way, in accordance with PWC standards. All connections to the customer side of the meter shall be completed by the Contractor, utilizing brass fittings.

Work shall include replacement of the existing meter box. Payment under this item shall include all costs necessary to remove the existing service and install the new copper service. Work shall include cutting and removal of pavement, proper disposal of waste, excavation, backfill, compaction, installation, boring the lateral under pavement, connecting the new tailpiece to the customer side, furnishing and installing new meter boxes, corporations, saddles, lock valves, fittings, and all equipment, tools, labor, and incidentals necessary to complete the work.

All services on mains that are being replaced shall be replaced utilizing new corporations and meter boxes.

2.11 Temporary Water System

This item shall be measured by the actual linear feet of the specified temporary water main installed. Payment shall be made at the applicable unit price bid per foot as listed in the Bid Form.

Payment under this line item includes furnishing all new materials, equipment, and labor required to provide temporary water service and maintain fire protection, including fittings, valves, blow- offs, temporary hydrants, etc., as specified, for all affected areas during cleaning and lining operations, as well as emergency temporary water systems. Also included is the cost for disinfecting, flushing, coordination with the appropriate Fire Department regarding placement of temporary hydrants, properly disposing of the chlorinated water, for protecting the system from freezing during cold weather, for providing 24 hour maintenance as specified, and as approved by the Owner, erosion control measures, and all other labor, materials, equipment, and incidentals necessary to complete the work. No payment for temporary water shall be made until the temporary water system has been disinfected and successfully passed all required bacteriological testing. Payment for the temporary water system shall be made once, upon successful completion of the bacteriological testing. No payment shall be made for maintenance of the temporary water system or its removal.

WATER MAIN LINING ITEMS

3.01 Access Pits

This item shall be measured by the actual count of access pits installed. Payment shall be made at the applicable unit price per each as listed in the Bid Form. Payment shall be based on a standard size access pit of five (5) feet by seven (7) feet, and for any additional size and/or depth required, as approved by the Owner.

Payment under this line item includes furnishing all materials, equipment and labor required to provide excavations to access the water main for cleaning and lining operations only. Work shall include performing all necessary work in the access pits, to include but not limited to the following:

a) Cutting, removing and disposing of any fittings, valves, fire hydrants, sections of main, etc. Existing fire hydrants that are to be replaced shall be set aside in the Contractor's staging area for PWC to pick up.
b) Cutting, removing, and properly disposing of any asphalt and/or concrete necessary to complete the excavation.
c) Providing temporary thrust restraint, and for making all temporary connections necessary to perform the cleaning procedures.
d) Replacement pipe, fittings and valves installed in the access pit between the two cut ends of the existing water main.
e) The cost to make all permanent connections of the newly lined main to the existing main using one long pattern solid sleeve per branch and ductile iron pipe. All permanent connections (including the valves and long pattern solid sleeves) shall be restrained, either by the use of mechanical restraint (i.e., mega-lugs, etc.) or factory restraint.
f) The cost for shoring, maintaining, and protecting from pedestrians and traffic, installing steel traffic plates over the pits in streets, properly backfilling and compacting.
g) Installation and maintenance of appropriate traffic control measures.
h) Installation and maintenance of necessary erosion control measures
i) Backfill and compaction

Payment for restoration (i.e., pavement patching, seeding, etc.) will be made in accordance with the applicable unit price line item in the Proposal.

3.02 Water Main Cleaning and Lining

This item includes furnishing all new materials, equipment, and labor required to mechanically clean and apply an epoxy resin lining to the existing water main complete, as specified and as shown in these Contract Documents. This item shall also include but not be limited to the cost of the following:

a) For notifying all affected residents of impending construction at least 48 hours in advance of start-up.
b) For properly disposing of cleaning water and associated residue.
c) For capping the ends of the pipe to prevent water from entering the main.
d) For capping the ends of newly lined pipe with mechanical joint caps, to ensure cleanliness after lining operations.
e) For disinfecting the newly lined pipe, properly disposing of the chlorinated water, activating the newly lined main.
f) For all special scheduling necessary to complete this project in an orderly manner but as may be dictated by right-of-way acquisition and/or encroachment issuance.
g) For the selective clearing and grubbing of the right-of-way as directed by the Owner.
h) For all necessary and/or required, taps, plugs, temporary two (2) inch blow-offs, reducers, and all other appurtenances and incidental work necessary to properly clean and line the pipe.
i) For all erosion control measures for which there is no separate pay item.
j) For correcting any damage, which may occur to the road shoulders where there is no separate pay item.
k) For temporary patching of driveways, walkways, roadways, etc. immediately following construction and maintaining same until permanent repairs are made.
l) For compliance with all applicable PWC and OSHA regulations.
m) For traffic control measures for which there is no separate pay item.
n) For coordinating activities with appropriate agencies.

This item shall be measured by the actual linear feet of water main cleaned and lined, excluding the water main within the access pits. Payment shall be made at the applicable unit price bid per foot as listed in the Bid Form.

Payment under this line item shall include all costs necessary to clean and line the specified water main, in accordance with these Contract Documents. Work shall include all costs to mechanically clean the existing water main, prepare the cleaned water main for lining, application of an epoxy resin liner to the water main, those items outlined above, and all labor, materials, equipment, and incidentals necessary to complete the work. No payment for cleaning and lining will be made until the line has been disinfected and successfully passed all required bacteriological testing.

3.03 Closed Circuit TV Inspection

This item shall be measured by the actual linear footage of pipe that is inspected. Measurement shall be the actual distance measured from access pit to access pit, less any replacement pipe within the access pit. Payment shall be made at the contract unit price per foot of water line inspected.

Payment under this line item shall include all labor, materials, equipment, and other incidentals not specifically covered in other bid items, necessary to perform pre- and post-rehabilitation video inspection of the water main. The video inspection shall be in accordance with the requirements outlined in these Contract Documents.

3.04 Remove Obstruction in Existing Pipe

This item shall be measured by the actual count of obstructions removed from the existing water main. Payment shall be made at the unit price bid per each as listed in the Bid Form.

Payment under this item shall include all costs necessary to remove the obstruction to allow the passage of cleaning or lining tools through an existing water main. Work shall include saw-cutting and removal of pavement, disposal of unsuitable material, excavation, cutting and removal of the existing pipe, replacement pipe, mechanical joint sleeves, fittings, erosion control, traffic control, backfill, compaction, and all equipment, tools, materials, labor, and incidentals necessary to complete the work.

The Contractor shall provide documentation of the obstruction to the PWC Project Engineer or PWC Project Coordinator.

Pavement replacement and other restoration items shall be paid for in accordance with the applicable Contract cost.

OTHER ITEMS

The following are items that are not specifically identified as bid items. Therefore, any costs related to these items shall be included in the unit prices bid.

A. Erosion and Sediment Control

The unit prices bid shall include all costs for furnishing, erecting, maintaining and removing silt fence, temporary sedimentation control devices, rip-rap, rock check dams, temporary seeding, gravel construction entrances, filter fabric, integral straw, culled wood matting, inlet protection and any other control devices as may be required by the appropriate regulatory agencies throughout the project site, throughout the project duration. No additional payment will be made for removal of soil and debris from drainage structure or features, reconditioning grading or other work due to inadequate or improperly maintained measures.

Prospective bidders are advised that erosion and sedimentation control will be strictly enforced, and any failure to conform to required standards is considered a right precedent to the Owner to deny payment. Measures required by the North Carolina Department of Environment and Natural Resources (NCDEQ) shall not be cause for change in the unit prices bid. Bidders shall make themselves aware of all NCDEQ regulations and requirements. The Contractor shall be responsible for all fines levied due to improper erosion and sediment control measures to include all costs incurred by City of Fayetteville and/or Public Works Commission necessary to bring a non-conforming site into compliance.

B. Demolish and Dispose Existing Materials within Work Limits

The unit prices bid shall include demolition of existing pavement, sub-grade and concrete curb and gutter required to re-build streets to existing or better condition. The unit prices bid shall include all costs for furnishing labor and equipment necessary for demolition and proper disposal of excess or unsuitable materials.

*** END OF SECTION ***

DIVISION I
1300 – SUBMITTALS

1.01 THE REQUIREMENT

A. This section specifies the means of all submittals. All submittals shall be submitted to the Fayetteville Public Works Commission. A general summary of the types of submittals and the number of copies required is as follows:

Electronic Submittal	Type of Submittal
1	Administrative Submittals
1	Construction schedule
1	Shop drawings
1	Product samples
1	Preconstruction Video
1	Certificates of compliance
1	Warranties

B. All submittals shall be provided in accordance with this Section, and as outlined in Section 01000 – Special Conditions. The Contractor shall refer to other Specification Sections within these Contract Documents, to ensure that all submittal requirements are adhered to. No construction shall proceed until all required submittals have been reviewed and approved by the Fayetteville Public Works Commission. Any and all work performed prior to review and acceptance of the submittals by the Fayetteville Public Works Commission shall be at the Contractor's sole risk. Further, failure to comply with the requirements of this Section may be considered Breach of Contract, and grounds for termination.

1.02 SUBMITTAL PROCEDURES

A. The Contractor shall transmit each submittal with a form acceptable to the Fayetteville Public Works Commission, clearly identifying the project and the Contractor, the enclosed material and other pertinent information specified in other parts of this section. The submittal shall identify variations from the Contract Documents and Product or system limitations which may be detrimental to successful performance of the completed Work.

B. The Contractor shall revise and resubmit submittals as required, identifying all changes made since previous submittals. Resubmittals shall be noted as such.

C. The Contractor shall distribute copies of reviewed submittals to concerned parties, with instructions to those parties to promptly report any inability to comply with provisions.

1.03 ADMINISTRATIVE SUBMITTALS

A. All administrative submittals shall be prepared and submitted in accordance with the Submittal Checklist provided in these Contract Documents. All Preconstruction Administrative submittals must be submitted and approved prior to the release of Contractor's first Application for Payment. Construction Administrative Submittals must be submitted and approved prior to the release of monthly pay applications. Post

Construction Administrative Submittals must be submitted and approved prior to the release of the Contractor's Final Application for Payment.

1.04 CONSTRUCTION SCHEDULE

A. The construction schedule shall be prepared and submitted in accordance with Specification Section 01310. Six (6) copies of the schedule shall be submitted to the Project Engineer within 10 calendar days after the date of the Notice to Proceed.

B. The construction schedule shall be revised to reflect comments by the Fayetteville Public Works Commission and updated monthly, depicting progress to the last day of the month. Six (6) copies shall be submitted to the Project Engineer no later than the Monday prior to each Monthly Progress Meeting.

C. Changes to the schedule shall be accompanied by a letter of explanation with appropriate reference and revision date on the schedule.

1.05 SHOP DRAWINGS

A. General: The Contractor shall submit for review shop drawings for concrete reinforcement, structural details, materials fabricated especially for this Contract, and materials for which such Drawings are specified (as outlined in these Contract Documents) or as specifically requested by the Fayetteville Public Works Commission.

B. Shop drawings shall show the principal dimensions, weight, structural and operating features, type and/or brand of finish or shop coat, grease fittings, etc., depending on the subject of the Drawings.

C. When so specified, or if considered by the Fayetteville Public Works Commission to be acceptable, the manufacturer's specifications, catalog data, descriptive matter, illustrations, etc. may be submitted for review in place of shop drawings. In such case, the requirements shall be as specified for shop drawings, insofar as applicable.

D. The Contractor shall be responsible for the prompt submittal of all shop drawings so that there shall be no delay to the Work due to the absence of such Drawings. The Fayetteville Public Works Commission will review the shop drawings within 10 business days of receipt of such Drawings. Reviewed shop drawings will be returned to the Contractor by regular mail.

E. Time delays caused by rejection of submittals are not cause for extra charges to the Fayetteville Public Works Commission or time extensions.

F. Requirements: All shop drawings shall be submitted to the Fayetteville Public Works Commission through the Contractor. The Contractor is responsible for obtaining shop drawings from his subcontractors and returning reviewed Drawings to them. All shop drawings shall be prepared on standard size, 24-inch by 36-inch sheets, or smaller, as approved by the Fayetteville Public Works Commission. All Drawings shall be clearly marked with the name of the project, Fayetteville Public Works Commission, Contractor, and pay item to which the drawing applies. Drawings shall be suitably numbered and stamped by the Contractor. Each shipment of Drawings shall be accompanied by a letter of transmittal giving a list of the drawing numbers and the names mentioned above.

1.06 PRODUCT DATA

A. Where manufacturer's publications in the form of catalogs, brochures, illustrations, or other data sheets are submitted in lieu of prepared shop drawings, such submission shall specifically indicate the particular item offered. Identification of such items and

relative pertinent information shall be made with indelible ink. Submissions showing only general information will not be accepted.

B. Product data shall include materials of construction, dimensions, performance characteristics and capacities, etc.

C. Pipe manufacturer shall submit documentation for all pipe being supplied to this project indicating date of manufacture, type and place of storage, shipping methods, dates of delivery to site, and all required testing data. Pipe internal surface shall be smooth and free of all cuts, gouges, or scratches. Surface cuts or scratches greater than or equal to the maximum defect depth are not acceptable.

1.07 SAMPLE WARRANTIES

A. When warranties are called for, a sample of the warranty shall be submitted with the shop drawings. The sample warranty shall be the same form that will be used for the actual warranty.

1.08 WORK PRIOR TO REVIEW

A. No material or equipment shall be purchased, fabricated especially for this Contract, or delivered to the project site until the required shop drawings have been submitted, processed and marked either "APPROVED" or "APPROVED AS NOTED". All materials and Work involved in the construction shall be as represented by said Drawings.

B. The Contractor shall not proceed with any portion of the Work for which the design and details are dependent upon the design and details of equipment for which submittal review has not been completed.

1.09 CONTRACTOR’S REVIEW

A. Only submittals which have been checked and corrected should be submitted to the Contractor by his subcontractors and vendors. Prior to submitting shop drawings to the Fayetteville Public Works Commission, the Contractor shall check thoroughly all such Drawings to satisfy himself that the subject matter thereof conforms to the Drawings and Specifications in all respects. Drawings which are correct shall be marked with the date, checker's name and indications of the Contractor's approval, and then shall be submitted to the Fayetteville Public Works Commission; other Drawings submitted to the Fayetteville Public Works Commission will be returned to the Contractor unreviewed.

B. The review of shop drawings will be general and shall not relieve the Contractor of the responsibility for details of design, dimensions, etc., necessary for proper fitting and construction of the Work required by the Contract and for achieving the specified performance.

C. For submissions containing departures from the Contract Documents, the Contractor shall include proper explanation in his letter of transmittal. Should the Contractor submit for review equipment that requires modifications to the structures, piping, layout, etc. detailed on the Drawings, he shall also submit for review details of the proposed modifications. If such equipment and modifications are accepted, the Contractor, at no additional cost to the Fayetteville Public Works Commission, shall do all Work necessary to make such modifications.

1.10 SUBSTITUTIONS

A. Whenever a particular brand or make of material, equipment, or other item is specified, or is indicated in these Contract Documents, it is for the purpose of establishing a standard of quality, design, and type desired and to supplement the detailed specifications. Any other brand or make which, in the opinion of the Fayetteville Public Works Commission, is equivalent to that specified or indicated may be offered as a substitute subject to the following provisions:

1. Contractor shall submit for each proposed substitution sufficient details, complete descriptive literature, and performance data together with samples of the materials, where feasible, to enable the Fayetteville Public Works Commission to determine if the proposed substitution is equal.
2. Contractor shall submit certified tests, where applicable, by an independent laboratory attesting that the proposed substitution is equal.
3. A list of installations (including contact information) where the proposed substitution is equal.
4. Where the acceptance of a substitution requires revision or redesign of any part of the Work, all such revision and redesign, and all new Drawings and details required therefore, shall be provided by the Contractor at his own cost and expense, and shall be subject to review of the Fayetteville Public Works Commission.
5. In all cases the Fayetteville Public Works Commission shall be the sole judge as to whether a proposed substitution is to be accepted. The Contractor shall abide by the Fayetteville Public Works Commission 's decision when proposed substitute items are judged to be unacceptable and shall in such instances furnish the item, or substitute, as specified. No substitute items shall be used in the Work without written acceptance of the Fayetteville Public Works Commission. The Fayetteville Public Works Commission reserves the right to reject any such proposed changes or substitutions at their sole discretion, and is under no obligation to justify their decision.
6. Acceptance of any proposed substitution shall in no way release the Contractor from any of the provisions of the Contract Documents.

B. Each submittal shall be complete in all aspects incorporating all information and data required to evaluate the products' compliance with the Contract Documents. Partial or incomplete submissions shall be returned to the Contractor without review.

1. Shop Drawing Distribution: The Contractor shall submit one (1) PDF copy of all shop drawings to the Fayetteville Public Works Commission for review. Shop drawings will be reviewed, stamped and returned with the appropriate box checked either "APPROVED", "APPROVED AS NOTED", “NOT APPROVED” or "REVISE AND RESUBMIT".
2. If the Contractor requires additional copies of returned shop drawings, he shall include extra Drawings in his original submittal. The Fayetteville Public Works Commission will process the Drawings and return them to the Contractor.

1.11 PRODUCT SAMPLES

A. Contractor shall furnish for review all product samples as required by the Contract Documents or requested by the Fayetteville Public Works Commission to determine compliance with the specifications.

B. Samples shall be of sufficient size or quantity to clearly illustrate the quality, type, range of color, finish or texture and shall be properly labeled to show complete project identification, the nature of the material, trade name of manufacturer and location of the Work where the material represented by the sample will be used.

C. Samples shall be checked by the Contractor for conformance to the Contract Documents before being submitted to the Fayetteville Public Works Commission and shall bear the Contractor's stamp certifying that they have been so checked. Transportation charges on samples submitted to the Fayetteville Public Works Commission shall be prepaid by the Contractor.

D. Fayetteville Public Works Commission's review will be for compliance with the Contract Documents, and his comments will be transmitted to the Contractor within 15 business days of receipt.

E. Acceptable samples will establish the standards by which the completed Work will be judged.

1.12 PRECONSTRUCTION VIDEO

A. The Contractor shall document pre-existing conditions on the project site in accordance with these Contract Documents. This shall be done prior to Work beginning in the area. The video shall be submitted to the Project Engineer before the first payment application can be released.

1.13 RECORD DRAWINGS

A. Upon completion of the Work, the Contractor shall provide two complete sets of drawings recording all changes to the work to indicate actual installation. Changes shall be noted in legible red letters. These changes shall include but are not limited to the following:

1. Change in pipe material
2. Change in manhole location
3. Size, depth, and installed elevations of mains, laterals, force mains, manholes and lift stations.
4. Location of valves, blow-offs, and other appurtenances
5. Changes in location or extent of grout filled mains.
6. Changes in force main bend locations, restrained joints or casings.

B. Completion of the Contractor’s record drawings is a specific contract requirement, and final payment will not be made until these drawings and project manual (as required) have been submitted to and approved by the Project Engineer.

1.14 CERTIFICATES OF COMPLIANCE

A. Copies of certificates of compliance and test reports shall be submitted for requested items to the Fayetteville Public Works Commission prior to request for payment.

1.15 WARRANTIES

A. Original warranties, called for in the Contract Documents, shall be submitted to the Fayetteville Public Works Commission. When warranties are required for an item, the warranty shall be submitted prior to request for payment of that item.

B. When warranties are requested, a sample of the warranty to be provided shall be submitted with, and considered part of, the shop drawings.

C. The Contractor shall warrant to the Fayetteville Public Works Commission that all material and labor used in the construction are covered by his warrantee for a minimum of a one (1) year period upon approval and acceptance by the Fayetteville Public Works Commission. The Contractor shall replace or repair defects at no cost to the Fayetteville Public Works Commission during the warrantee period.

*** END OF SECTION ***

DIVISION I
1310 – CONSTRUCTION SCHEDULE

Part 1 – GENERAL

1.01 Work Included:

A. This section specifies requirements and procedures in preparing and updating construction schedules and reports for planning, coordinating, executing and monitoring the progress of the work. The construction work shall be scheduled to be completed within the specified duration of the Contract.

1.02 Related Work Specified Elsewhere

A. Special Provisions

B. General Conditions

C. Submittals

1.03 Scheduling Responsibilities

A. The construction schedule will be used to monitor job progress. The Contractor will be responsible for providing all information concerning the sequencing, logic and durations of planned activities. The Contractor will be responsible for providing monthly update information on logic changes, percent complete, actual start and finish dates and duration changes. The Contractor will be required to produce the monthly, computerized printout of the schedule updates.

B. Assembling the initial schedule in hand drawn or computer-generated (preferred) form is the responsibility of the Contractor.

C. It should be clearly understood that the initial schedule and all update information must be provided by the Contractor and that this information is a representation of the best efforts of the Contractor and his subcontractors as to how they envision the work to be accomplished. Similarly, all progress information to be provided by and through the Contractor must be an accurate representation of his or his subcontractors' or suppliers' actual performance. The schedule shall at all times remain an accurate reflection of the Contractor's actual or projected sequencing of the work. Once accepted, adherence to the schedule shall be obligatory upon the Contractor and his subcontractor for the work under this Contract. Owner may require the Contractor to revise the schedule if, in the Project Engineer's judgment, the schedule does not accurately reflect the actual extension of the work, or is in violation of any provision of the Contract Documents. The Contractor shall provide the necessary information required to revise the schedule as often as is necessary during the course of performance of the work without additional cost to the Owner.

1.04 Progress of Work

A. The work shall be started on the date indicated in the Notice to Proceed and shall be executed with such progress as may be required to prevent delay to other Contractors or to the general completion of this project. The Contractor shall at all times, schedule and direct his work so that it provides an orderly progression of the work to completion within the specified Contract Time. The Contractor shall account

for traffic control requirements, access of citizens within the work area and the requirements for timely restoration.

B. The Contractor agrees that, whenever it becomes apparent from the current monthly schedule update that delays to the planned progress of work have resulted and these delays are through no fault of the Owner and hence, the Contract completion date will not be met, or when so directed by the Project Engineer, he will prepare a recovery schedule outlining steps to recover time and to complete the project on schedule.

C. The Contractor shall submit for review a written statement of the steps he intends to take, to remove or arrest the delay to the schedule. The Contractor shall promptly provide such level of effort at no additional cost to the Owner. In addition, should schedule delays persist; the Contractor's surety will be asked to attend a schedule update meeting.

D. Failure of the Contractor to comply with the requirements of this provision shall subject him to, at the Owner's sole discretion, withholding, in partial or in total, payments otherwise due the Contractor for work due under this Contract. The Contractor agrees that any withholding of monies is not a penalty for noncompliance, but is an assurance for the Owner that funds will be available to implement these requirements should the Contractor fail to do so, since failure of the Contractor to comply with these requirements shall mean that the Contractor failed to execute the work with such diligence as to ensure its completion within the time for completion.

Part 2 – CONSTRUCTION SCHEDULE

2.01 Schedule Requirements

A. The schedule shall show the order and interdependence of activities and the sequence in which the work is to be accomplished as planned by the Contractor. The schedule shall show how the start date of a given activity is dependent on the completion date of preceding activities how its completion restricts the start of succeeding activities. A time scaled precedence format will be followed. The schedule shall indicate the start date, completion date, and duration (in days), of each activity.

B. The Schedule Activities shall be developed into two major groups:

1. Construction Activities - Construction activities will be physical work activities that describe how the job will be constructed. Work shall include planned restoration and paving.
2. Post Construction Testing, Start-up, Training and Close-out - Activities for this group shall include all work required satisfying appropriate specification requirements sections and meeting the requirements of final completion. There are at least 3 mandatory activities: Punch list, Final Walkthrough and Project Complete.

C. The Contractor shall break the work into activity durations of one to twenty (1 to 20) working days each, except for non-construction activities (such as procurement of materials and delivery of equipment) and other activities that may require longer durations. To the extent feasible, activities related to a specific physical or geographic area of the project should be grouped on the schedule for ease of

understanding and simplification. The selection and number of activities shall be subject to the review of the Project Engineer.

D. Each activity on the schedule shall have indicated for it the following:

1. Construction activities will be divided by easily recognizable division points such as stationing or street names, area of work, etc.
2. A brief description of the activity will be included. If this description is not definitive, a separate listing of each activity and a descriptive narrative may be required.
3. Where the Contractor intends to perform work concurrently, a resource or crew identifier will be assigned to the activity to indicate parallel paths.
4. Established PWC holidays and other non-work days will be excluded from the schedule.

E. Failure to include on the schedule any element of work required for the performance of this Contract shall not excuse the Contractor from completing all work required within the applicable Contract Time.

F. A schedule which shows a completion of any portion of the construction work prior to the Contract Time dates may be accepted but in no event shall be acceptable as a basis for a claim for any delay against the Owner by the Contractor.

Part 3 – SCHEDULE OF SUBMITTALS

3.01 Schedule Implementation

A. Within (10) calendar days after the Notice to Proceed, the Contractor shall submit six (6) copies of their proposed construction schedule for the entire Contract duration to the Project Engineer.

B. The Contractor shall submit hard copies and a schedule on disk in a format wholly compatible with Microsoft Project. Submission of an electronic schedule does not preclude any other of the aforementioned individual activity requirements.

C. If a review of the submitted schedule indicates a work plan that will not complete the work within the Contract time, it shall be the responsibility of the Contractor to revise the schedule as required and resubmit it until it is acceptable. Failure by the Contractor to submit an acceptable schedule may, at the Owner's sole discretion, be cause for the withholding of any partial payment(s) otherwise due under the Contract.

D. Acceptance of the schedule shall not constitute a representation by the Owner that the work can be completed as shown on the schedule.

3.02 Schedule Updates

A. The Contractor shall submit a Schedule Update on the Monday prior to the monthly progress meeting, (or as directed by the Project Engineer), to allow the Project Engineer to review the schedule. The schedule shall be up-to-date as of the previous Friday or as directed by the Project Engineer. Actual progress of the previous month shall be recorded and future activities will be reviewed. The duration of activities and their logical connections may be revised as needed. Decisions made at these meetings and agreed to by all parties are binding with the exception that no

contractual completion dates will be modified without formal written requests and acceptance as specified in the Contract Documents. The Contractor must provide the following information for each update at a minimum:

1. Actual start and finish dates for all completed activities.
2. Actual start dates for all started but incomplete activities including remaining durations and/or percent completes.
3. Revisions in the logic, critical path or resource assigned to an activity that would affect the anticipated early start of all activities not yet started.
4. Any approved extension of Contract time shall be included in the next monthly updating of the schedule.

B. Provide a Monthly Progress Status Report that provides the following items:

1. Summarized revisions made to the Construction Schedule since the previous submittal.
2. Work anticipated to be started during the next period, including those activities already in progress.
3. Problem areas, anticipated delays, and the impact on the schedule.
4. Corrective action.
5. The effect of changes on schedules of other prime Contractors in adjacent work areas.

C. Failure to provide update information listed above, or failure to attend progress meetings may result in the Owner withholding partial payments.

- END OF SECTION -

DIVISION I
01400 – QUALITY CONTROL

1.01 QUALITY ASSURANCE

A. Quality: All materials shall be new and correctly designed, and shall conform to the requirements outlined in these Contract Documents. They shall be standard first-grade quality produced by expert workmen and be intended for the use for which they are offered. Materials which, in the opinion of the Fayetteville Public Works Commission, are inferior or of a lower grade than indicated, specified, or required will not be acceptable.

B. Source Limitations: To the greatest extent possible for each unit of Work, the Contractor shall provide products, materials, or equipment from a single manufacturer.

C. Compatibility of Options: If the Contractor cannot obtain all necessary products, materials, and/or equipment from a single manufacturer, the Contractor shall submit compatible products, materials, and/or equipment to the Fayetteville Public Works Commission for review and approval. Once the Fayetteville Public Works Commission has issued approval of the proposed products, materials, and/or equipment, the Contractor shall only utilize that manufacturer's products, materials, and/or equipment, unless otherwise approved in writing by the Fayetteville Public Works Commission.

1.02 QUALITY CONTROL

A. Quality control is the sole responsibility of the Contractor and shall include the activities of his Subcontractors and all suppliers as required.

1.03 TESTING SERVICES

A. The Contractor shall cooperate with the Fayetteville Public Works Commission's Consultant performing required testing and provide equipment, access, or other means required at no additional expense to the Fayetteville Public Works Commission. The Contractor shall be responsible for coordinating testing with the PWC Project Coordinator. The Contractor shall be responsible for all costs incurred by the Fayetteville Public Works Commission's Consultant when scheduled testing cannot be performed.

B. The Fayetteville Public Works Commission shall employ and pay for the services of an independent laboratory for specified testing as outlined in these Contract Documents, with the following exceptions:

1. If Laws and Regulations of any public body having jurisdiction specifically require any part of the Work to be tested, inspected, or approved by an employee or other representative of that public body, the Contractor shall be responsible for arranging and obtaining such inspections and/or approvals. The Contractor shall bear all costs associated with the required testing, inspections, and/or approvals, and shall furnish the Fayetteville Public Works Commission all required documentation that the required testing, inspection, and/or approvals have been obtained.

2. If any part of the Work is found to be defective and not in compliance with the Contract Documents, the Contractor shall be responsible for all subsequent testing necessary to prove that the Work has been brought into compliance. Any

necessary testing to ensure compliance shall be directed by the PWC Project Coordinator and/or PWC Project Engineer.

3. When scheduled testing by the Fayetteville Public Works Commission's Consultant cannot be performed.
4. Arranging and obtaining any required inspections, testing, or approvals required in connection with the Fayetteville Public Works Commission's acceptance of a material supplier, or equipment proposed to be incorporated into the Work, or materials, mix designs, etc. submitted for approval prior to purchase for incorporation into the Work. All inspections, tests, and approvals shall be performed by organizations acceptable to the Fayetteville Public Works Commission.

1.04 PRODUCT EVALUATION

A. Testing shall be accomplished as deemed necessary by the Fayetteville Public Works Commission to ensure that the products conform to the requirements of the Contract Documents.

B. The work or actions of the testing laboratory shall in no way relieve the Contractor of his obligations under the Contract. The laboratory testing work will include such inspections and testing required by the Contract Documents, existing laws, codes, ordinances, etc. The testing laboratory will have no authority to change the requirements of the Contract Documents, nor perform, accept or approve any of the Contractor's Work.

C. The Contractor shall allow the Fayetteville Public Works Commission ample time and opportunity for evaluation and testing materials to be used in the Work. The Contractor shall advise the Fayetteville Public Works Commission promptly upon placing orders for materials so that arrangements may be made, if desired, for evaluation before shipment from the place of manufacture. The Contractor shall at all times furnish the Fayetteville Public Works Commission and his representatives, facilities including labor, and allow proper time for evaluation and testing materials, and workmanship. The Contractor must anticipate that possible delays may occur due to the necessity of materials being inspected and accepted for use. The Contractor shall furnish, at his own expense, all samples of materials required by the Fayetteville Public Works Commission for testing, and shall make his own arrangements for providing water, electric power, or fuel for the various evaluation and tests of structures and materials.

D. The Fayetteville Public Works Commission will bear the cost of all tests, evaluation, or investigations undertaken by the order of the PWC Project Engineer for the purpose of determining conformance with the Contract Documents if such tests, evaluation, or investigations are not specifically required by the Contract Documents, and if conformance is ascertained thereby. Whenever nonconformance is determined by the Fayetteville Public Works Commission as a result of such tests, evaluation, or investigations, the Contractor shall bear the full cost of any additional tests, evaluations and investigations, which are ordered by the Fayetteville Public Works Commission to ascertain subsequent conformance with the Contract Documents.

1.05 EVALUATION AT PLACE OF MANUFACTURE

A. Unless otherwise specified, all products and materials shall be subject to evaluation by the Fayetteville Public Works Commission at the place of manufacture.

B. The presence of the Fayetteville Public Works Commission at the place of manufacture, however, shall not relieve the Contractor of the responsibility for furnishing products, materials, and equipment which comply with all requirements of the Contract Documents. Compliance is a duty of the Contractor, and said duty shall not be avoided by any act or omission on the part of the Fayetteville Public Works Commission.

1.06 SAMPLING AND TESTING

A. Unless otherwise specified, all sampling and testing shall be in accordance with the methods prescribed in the current standards of the ASTM, as applicable to the class and nature of the article or materials considered. However, the Fayetteville Public Works Commission reserves the right to use any generally accepted system of sampling and testing which will ensure that the quality of the workmanship is in full accord with the Contract Documents.

B. Any waiver by the Fayetteville Public Works Commission of any specific testing or other quality assurance measures shall not be construed as a waiver of any requirements of the Contract Documents. The Fayetteville Public Works Commission may require a guarantee of substantial performance and/or a performance bond to ensure any necessary corrective or remedial Work, should a waiver be granted.

C. The Fayetteville Public Works Commission reserves the right to make independent investigations and tests. Failure of any portion of the Work to meet any of the requirements of the Contract Documents shall be reasonable cause for the Fayetteville Public Works Commission to require the removal or correction and reconstruction of any such work in accordance with the Contract Documents. In addition to any other evaluation, observation or quality assurance provisions that may be specified, the Fayetteville Public Works Commission shall have the right to independently select, test, and analyze, at their expense, additional test specimens or any or all of the materials to be used. Results of such tests and analyses shall be considered along with the tests or analyses made by the Contractor to determine compliance with the applicable specifications for the materials so tested or analyzed. The Contractor shall be responsible for all costs of removal, correction, and reconstruction or repair of any such Work that fails to meet the requirements of the Contract Documents.

1.07 SITE INVESTIGATION AND CONTROL

A. The Contractor shall verify all dimensions in the field and shall check field conditions continuously during construction. The Contractor shall be solely responsible for any inaccuracies built into the Work due to their failure to comply with this requirement.

B. The Contractor shall inspect related and appurtenant Work and shall report in writing to the Fayetteville Public Works Commission any conditions which will prevent proper completion of the Work. Failure to report any such conditions shall constitute acceptance of all site conditions, and any required removal, repair, or replacement caused by unsuitable conditions shall be performed by the Contractor at their sole cost and expense.

1.08 RIGHT OF REJECTION

A. The Fayetteville Public Works Commission shall have the right, at all times, to reject any articles or materials to be furnished hereunder which, in any respect, fail to meet the requirements of the Contract Documents, regardless of whether the defects in such articles or materials are detected at the point of manufacture or after completion of the Work. If the Fayetteville Public Works Commission, through an oversight or otherwise, has accepted materials or Work which is defective or which is contrary to the Contract Documents, such materials, no matter in what stage or condition of manufacture, delivery, or erection, may be subsequently rejected by the Fayetteville Public Works Commission.

B. The Contractor shall promptly remove rejected articles or materials from the Work after notification of rejection. All costs of removal and replacement of rejected articles or materials as specified herein shall be borne by the Contractor.

1.09 WATERTIGHTNESS OF STRUCTURES

A. It is the intent of these Contract Documents that all Work shall be performed as required by quality construction to ensure proper sealing so that groundwater and/or rainwater will not leak into any collection line, service lateral, or manhole.

B. The Contractor shall provide at its own expense all labor, material, temporary bulkheads, pumps, water, measuring devices, etc., necessary to perform the required tests.

1.10 HYDRAULIC UPLIFT ON STRUCTURES

A. The Contractor shall be completely responsible for any pipelines or manholes that may become buoyant before the Work is completed and accepted. The Contractor shall take all necessary steps to prevent any structures from becoming buoyant. Damage to any structures due to floating or flooding shall be repaired or replaced at the Contractor's expense.

1.11 TIME OF OBSERVATION AND TESTS

A. Samples and test specimens required under these Contract Documents shall be furnished and prepared for testing in ample time for the completion of the necessary tests and analyses before said articles or materials are to be used. The Contractor shall furnish and prepare all required test specimens within the scope of the Contract. Except as otherwise provided in the Contract Documents, the performance and cost of the required tests will be the responsibility of the Fayetteville Public Works Commission. However, the costs of any test which shows unsatisfactory results shall be borne by the Contractor. Whenever the Contractor is ready to backfill, bury, cast in concrete, or otherwise cover any Work under the Contract, the Fayetteville Public Works Commission shall be notified not less than twenty-four hours in advance to request inspection before beginning any such Work of covering. Failure of the Contractor to notify the Fayetteville Public Works Commission a minimum of twenty-four hours in advance of any such inspections shall be cause for the Fayetteville Public Works Commission to order a delay in the Contractor's schedule to allow time for inspections. Any remedial or corrective Work required, and all costs of such delays, including its effect upon other portions of the Work, shall be borne by the Contractor.

- END OF SECTION –

DIVISION I
01400 – QUALITY CONTROL

1.01 QUALITY ASSURANCE

A. Quality: All materials shall be new and correctly designed, and shall conform to the requirements outlined in these Contract Documents. They shall be standard first-grade quality produced by expert workmen and be intended for the use for which they are offered. Materials which, in the opinion of the Fayetteville Public Works Commission, are inferior or of a lower grade than indicated, specified, or required will not be acceptable.

B. Source Limitations: To the greatest extent possible for each unit of Work, the Contractor shall provide products, materials, or equipment from a single manufacturer.

C. Compatibility of Options: If the Contractor cannot obtain all necessary products, materials, and/or equipment from a single manufacturer, the Contractor shall submit compatible products, materials, and/or equipment to the Fayetteville Public Works Commission for review and approval. Once the Fayetteville Public Works Commission has issued approval of the proposed products, materials, and/or equipment, the Contractor shall only utilize that manufacturer's products, materials, and/or equipment, unless otherwise approved in writing by the Fayetteville Public Works Commission.

1.02 QUALITY CONTROL

A. Quality control is the sole responsibility of the Contractor and shall include the activities of his Subcontractors and all suppliers as required.

1.03 TESTING SERVICES

A. The Contractor shall cooperate with the Fayetteville Public Works Commission's Consultant performing required testing and provide equipment, access, or other means required at no additional expense to the Fayetteville Public Works Commission. The Contractor shall be responsible for coordinating testing with the PWC Project Coordinator. The Contractor shall be responsible for all costs incurred by the Fayetteville Public Works Commission's Consultant when scheduled testing cannot be performed.

B. The Fayetteville Public Works Commission shall employ and pay for the services of an independent laboratory for specified testing as outlined in these Contract Documents, with the following exceptions:

1. If Laws and Regulations of any public body having jurisdiction specifically require any part of the Work to be tested, inspected, or approved by an employee or other representative of that public body, the Contractor shall be responsible for arranging and obtaining such inspections and/or approvals. The Contractor shall bear all costs associated with the required testing, inspections, and/or approvals, and shall furnish the Fayetteville Public Works Commission all required documentation that the required testing, inspection, and/or approvals have been obtained.

2. If any part of the Work is found to be defective and not in compliance with the Contract Documents, the Contractor shall be responsible for all subsequent testing necessary to prove that the Work has been brought into compliance. Any

necessary testing to ensure compliance shall be directed by the PWC Project Coordinator and/or PWC Project Engineer.

3. When scheduled testing by the Fayetteville Public Works Commission's Consultant cannot be performed.
4. Arranging and obtaining any required inspections, testing, or approvals required in connection with the Fayetteville Public Works Commission's acceptance of a material supplier, or equipment proposed to be incorporated into the Work, or materials, mix designs, etc. submitted for approval prior to purchase for incorporation into the Work. All inspections, tests, and approvals shall be performed by organizations acceptable to the Fayetteville Public Works Commission.

1.04 PRODUCT EVALUATION

A. Testing shall be accomplished as deemed necessary by the Fayetteville Public Works Commission to ensure that the products conform to the requirements of the Contract Documents.

B. The work or actions of the testing laboratory shall in no way relieve the Contractor of his obligations under the Contract. The laboratory testing work will include such inspections and testing required by the Contract Documents, existing laws, codes, ordinances, etc. The testing laboratory will have no authority to change the requirements of the Contract Documents, nor perform, accept or approve any of the Contractor's Work.

C. The Contractor shall allow the Fayetteville Public Works Commission ample time and opportunity for evaluation and testing materials to be used in the Work. The Contractor shall advise the Fayetteville Public Works Commission promptly upon placing orders for materials so that arrangements may be made, if desired, for evaluation before shipment from the place of manufacture. The Contractor shall at all times furnish the Fayetteville Public Works Commission and his representatives, facilities including labor, and allow proper time for evaluation and testing materials, and workmanship. The Contractor must anticipate that possible delays may occur due to the necessity of materials being inspected and accepted for use. The Contractor shall furnish, at his own expense, all samples of materials required by the Fayetteville Public Works Commission for testing, and shall make his own arrangements for providing water, electric power, or fuel for the various evaluation and tests of structures and materials.

D. The Fayetteville Public Works Commission will bear the cost of all tests, evaluation, or investigations undertaken by the order of the PWC Project Engineer for the purpose of determining conformance with the Contract Documents if such tests, evaluation, or investigations are not specifically required by the Contract Documents, and if conformance is ascertained thereby. Whenever nonconformance is determined by the Fayetteville Public Works Commission as a result of such tests, evaluation, or investigations, the Contractor shall bear the full cost of any additional tests, evaluations and investigations, which are ordered by the Fayetteville Public Works Commission to ascertain subsequent conformance with the Contract Documents.

1.05 EVALUATION AT PLACE OF MANUFACTURE

A. Unless otherwise specified, all products and materials shall be subject to evaluation by the Fayetteville Public Works Commission at the place of manufacture.

B. The presence of the Fayetteville Public Works Commission at the place of manufacture, however, shall not relieve the Contractor of the responsibility for furnishing products, materials, and equipment which comply with all requirements of the Contract Documents. Compliance is a duty of the Contractor, and said duty shall not be avoided by any act or omission on the part of the Fayetteville Public Works Commission.

1.06 SAMPLING AND TESTING

A. Unless otherwise specified, all sampling and testing shall be in accordance with the methods prescribed in the current standards of the ASTM, as applicable to the class and nature of the article or materials considered. However, the Fayetteville Public Works Commission reserves the right to use any generally accepted system of sampling and testing which will ensure that the quality of the workmanship is in full accord with the Contract Documents.

B. Any waiver by the Fayetteville Public Works Commission of any specific testing or other quality assurance measures shall not be construed as a waiver of any requirements of the Contract Documents. The Fayetteville Public Works Commission may require a guarantee of substantial performance and/or a performance bond to ensure any necessary corrective or remedial Work, should a waiver be granted.

C. The Fayetteville Public Works Commission reserves the right to make independent investigations and tests. Failure of any portion of the Work to meet any of the requirements of the Contract Documents shall be reasonable cause for the Fayetteville Public Works Commission to require the removal or correction and reconstruction of any such work in accordance with the Contract Documents. In addition to any other evaluation, observation or quality assurance provisions that may be specified, the Fayetteville Public Works Commission shall have the right to independently select, test, and analyze, at their expense, additional test specimens or any or all of the materials to be used. Results of such tests and analyses shall be considered along with the tests or analyses made by the Contractor to determine compliance with the applicable specifications for the materials so tested or analyzed. The Contractor shall be responsible for all costs of removal, correction, and reconstruction or repair of any such Work that fails to meet the requirements of the Contract Documents.

1.07 SITE INVESTIGATION AND CONTROL

A. The Contractor shall verify all dimensions in the field and shall check field conditions continuously during construction. The Contractor shall be solely responsible for any inaccuracies built into the Work due to their failure to comply with this requirement.

B. The Contractor shall inspect related and appurtenant Work and shall report in writing to the Fayetteville Public Works Commission any conditions which will prevent proper completion of the Work. Failure to report any such conditions shall constitute acceptance of all site conditions, and any required removal, repair, or replacement caused by unsuitable conditions shall be performed by the Contractor at their sole cost and expense.

1.08 RIGHT OF REJECTION

A. The Fayetteville Public Works Commission shall have the right, at all times, to reject any articles or materials to be furnished hereunder which, in any respect, fail to meet the requirements of the Contract Documents, regardless of whether the defects in such articles or materials are detected at the point of manufacture or after completion of the Work. If the Fayetteville Public Works Commission, through an oversight or otherwise, has accepted materials or Work which is defective or which is contrary to the Contract Documents, such materials, no matter in what stage or condition of manufacture, delivery, or erection, may be subsequently rejected by the Fayetteville Public Works Commission.

B. The Contractor shall promptly remove rejected articles or materials from the Work after notification of rejection. All costs of removal and replacement of rejected articles or materials as specified herein shall be borne by the Contractor.

1.09 WATERTIGHTNESS OF STRUCTURES

A. It is the intent of these Contract Documents that all Work shall be performed as required by quality construction to ensure proper sealing so that groundwater and/or rainwater will not leak into any collection line, service lateral, or manhole.

B. The Contractor shall provide at its own expense all labor, material, temporary bulkheads, pumps, water, measuring devices, etc., necessary to perform the required tests.

1.10 HYDRAULIC UPLIFT ON STRUCTURES

A. The Contractor shall be completely responsible for any pipelines or manholes that may become buoyant before the Work is completed and accepted. The Contractor shall take all necessary steps to prevent any structures from becoming buoyant. Damage to any structures due to floating or flooding shall be repaired or replaced at the Contractor's expense.

1.11 TIME OF OBSERVATION AND TESTS

A. Samples and test specimens required under these Contract Documents shall be furnished and prepared for testing in ample time for the completion of the necessary tests and analyses before said articles or materials are to be used. The Contractor shall furnish and prepare all required test specimens within the scope of the Contract. Except as otherwise provided in the Contract Documents, the performance and cost of the required tests will be the responsibility of the Fayetteville Public Works Commission. However, the costs of any test which shows unsatisfactory results shall be borne by the Contractor. Whenever the Contractor is ready to backfill, bury, cast in concrete, or otherwise cover any Work under the Contract, the Fayetteville Public Works Commission shall be notified not less than twenty-four hours in advance to request inspection before beginning any such Work of covering. Failure of the Contractor to notify the Fayetteville Public Works Commission a minimum of twenty-four hours in advance of any such inspections shall be cause for the Fayetteville Public Works Commission to order a delay in the Contractor's schedule to allow time for inspections. Any remedial or corrective Work required, and all costs of such delays, including its effect upon other portions of the Work, shall be borne by the Contractor.

- END OF SECTION –

DIVISION I
01700 – PROJECT CLOSEOUT

1.01 FINAL CLEANUP

A. The Contractor shall promptly remove from the vicinity of the completed Work, all rubbish, unused materials, concrete forms, construction equipment, temporary structures and facilities, construction signs, tools, scaffolding, materials, supplies and equipment which may have been used in the performance of the work. The Contractor shall broom clean paved surfaces and rake clean other surfaces of grounds. Final acceptance of the Work by the Fayetteville Public Works Commission will be withheld until the Contractor has satisfactorily complied with the foregoing requirements for final cleanup of the project site.

B. The Contractor shall thoroughly clean all materials, equipment and structures; all marred surfaces shall be touched up to match adjacent surfaces.

C. The Contractor shall remove spatter, grease, stains, fingerprints, dirt, dust, labels, tags, packing materials and other foreign items or substances from interior and exterior surfaces, equipment, signs and lettering.

D. The Contractor shall remove paint, clean and restore all equipment and material nameplates, labels and other identification markings.

E. The Contractor shall maintain cleaning until project is accepted by the Fayetteville Public Works Commission.

F. The Contractor shall:

1. Use only cleaning materials recommended by manufacturer of surface to be cleaned.
2. Use each type of cleaning material on only those surfaces recommended by the cleaning material manufacturer.
3. Use only materials which will not create hazards to health or property.

1.02 CLOSEOUT TIMETABLE

A. The Contractor shall establish dates for testing, acceptance periods, and on-site instructional periods (as required under this Contract). The dates shall be established a minimum of seven (7) calendar days prior to beginning any of the foregoing items, to allow the Fayetteville Public Works Commission sufficient time to schedule attendance at the activities.

1.03 FINAL SUBMITTALS

A. Before the final acceptance of the project, the Contractor shall submit to the Fayetteville Public Works Commission certain records, certifications, etc., which are specified elsewhere in these Contract Documents. Missing, incomplete or unacceptable items, as determined by the Fayetteville Public Works Commission, shall constitute grounds for withholding final payment to the Contractor. A partial list of such items appears below, but is shall be the Contractor's responsibility to submit any other items which are required in these Contract Documents:

1. Written Test results of project components.
2. Written guarantees, where required.
3. Certificates of inspection and acceptance by local governing agencies having jurisdiction.

4. Releases from all parties who are entitled to claims against the subject project, property, or improvement pursuant to the provisions of law.

1.04 PUNCH LISTS

A. The Fayetteville Public Works Commission will make its final inspection whenever the Contractor has notified the Fayetteville Public Works Commission that the work is ready for the inspection. Any work not found acceptable and requiring cleaning, repair and/or replacement will be noted on the punch list. Work that has been inspected and accepted by the Fayetteville Public Works Commission shall be maintained by the Contractor, until final acceptance of the entire project.

B. Whenever the Contractor has completed the items on the punch list, the Contractor shall notify the Fayetteville Public Works Commission that it is ready for final inspection. This procedure will continue until the entire project is accepted by the Fayetteville Public Works Commission. The final payment will not be processed until the entire project has been accepted by the Fayetteville Public Works Commission and all of the requirements in these Contract Documents have been satisfied.

1.05 TOUCH-UP AND REPAIR

A. The Contractor shall repair any and all damage to existing facilities and surfaces. If in the opinion of the Fayetteville Public Works Commission the repair work is not satisfactory, the Contractor shall make repairs until the Fayetteville Public Works Commission accepts it.

1.06 MAINTENANCE AND GUARANTEE

A. The Contractor shall comply with all maintenance and guarantee requirements of these Contract Documents.

B. Replacement of earth fill, backfill, or asphalt where it has settled below the required finish elevations, shall be considered as a part of such required repair work, and any repair or resurfacing constructed by the Contractor which becomes necessary by reason of such settlement shall likewise be considered as a part of such required repair work unless the Contractor obtained a statement in writing from the affected private owner or public agency releasing the Fayetteville Public Works Commission from further responsibility in connection with such repair or resurfacing.

*** END OF SECTION ***

SECTION D – TECHNICAL SPECIFICATIONS

DIVISION 2
SITE WORK
02222 - EXCAVATION AND BACKFILLING FOR UTILITY SYSTEMS

GENERAL

Work described in this section consists of the excavation, backfill, compaction, and finish grading required to install the utility systems. The intent and purpose of these specifications is to require a complete and satisfactory installation in every respect and any defect in material or workmanship shall be cause for the replacement and correction of such defect as directed by the Public Works Commission.

RELATED SECTIONS

A. 02305 – Pipe Bursting
B. 02660 – Water Distribution
C. 02730 – Sanitary Sewer Systems
D. 02732 – Sewage Force Mains
E. Chapter 24 of the City of Fayetteville Ordinance (most recent version)

MATERIALS

Suitable soil materials are defined as those in accordance with AASHTO Soil Classification Groups A-1, A-2-4, A-2-5 and A-3 (or in accordance with ASTM D2487 soil classification groups GW, GP, GM, SM, SW, SP, SC) as determined by the Public Works Commission. Suitable material shall be free from roots, organic matter, trash, debris, frozen material or stones larger than three (3) inches in any dimension.

Unsuitable soil materials are defined as those in accordance with AASHTO Soil Classification Groups A-2-6, A-2-7, A-4, A-5, A-6, A-7 (or in accordance with ASTM D2487 soil classification groups GC, ML, MH, CL, CH, OL, OH, and PT) as determined by the Public Works Commission. Unsuitable material as defined above shall be replaced with select material as determined by the Public Works Commission.

Suitable materials determined by the Public Works Commission as too wet or too soft to provide a stable subgrade, foundation, or fill will be deemed as unsuitable regardless of soil classification. Materials deemed unsuitable shall be conditioned or replaced, as directed by the Public Works Commission. The Contractor shall recondition and stockpile the materials at no additional cost to the Public Works Commission.

EXCAVATION

All excavation shall be to the lines and grades indicated. The work shall consist of the excavation, placement, and compaction of suitable material as outlined in this Specification and proper disposal of all unsuitable materials. During excavation, suitable material for backfilling shall be stockpiled. The stockpiles shall be protected from contamination by unsuitable excavated material or other material. If any material becomes unsuitable, such material, if directed, shall be removed and replaced with suitable on-site or imported material from approved sources at no additional cost to the Public Works Commission.

Where the line parallels a creek and/or ditch the excavated material shall be stockpiled opposite the creek, with the trench separating the two. Adequate drainage shall be provided for the stockpiles and surrounding areas by means of ditches, dikes, or other approved methods. Grading shall be done to prevent surface water from entering the excavation. Any water within the trench shall be removed.

Suitable excavated material shall be stockpiled or placed in the excavation's backfill. Excavation and filling shall be performed in a manner and sequence that will provide drainage at all times. Unauthorized over excavation shall be backfilled with select bedding material at no additional cost to the Public Works Commission. The Contractor, at their expense, shall properly dispose of all excess excavated material unless directed to place it in another area of the project by the Public Works Commission. The Contractor's obligation to remove and dispose of excess materials shall in no manner convey to him any rights of property in any material taken from any excavation.

It shall be the Contractor's responsibility to investigate the site and existing conditions. No compensation will be allowed due to excavation and/or grading being different than anticipated.

TRENCH EXCAVATION

The trench width shall be in accordance with the PWC standard details. All work shall be in accordance with the applicable OSHA regulations.

The subgrade beneath the centerline of the pipe shall provide uniform support for each section of the pipe. Stones three (3) inches or greater in any dimension, or as recommended by the pipe manufacturer, whichever is smaller, shall be removed.

Where unsuitable material is encountered at the elevation established for installation of pipe or structures, additional undercut excavation shall be done as directed by the Public Works Commission. The additional undercut excavated area shall be backfilled with stone bedding material. Unauthorized undercut excavation shall be backfilled with stone bedding material and compacted as directed by the Public Works Commission. The Contractor shall conduct undercut operations in such a way that the Public Works Commission can take the necessary measurements before any backfill is placed. Any material removed and backfilled without the approval of the Public Works Commission, and/or all necessary measurements taken, and/or to a depth, length or width exceeding the dimensions shall not be considered undercut excavation and will not be paid for such.

Where unsuitable material is encountered at the elevation established for installation of roads, parking lots, or other paved areas, additional undercut excavation shall be done as directed by the responsible agency (i.e., City of Fayetteville, Town of Hope Mills, NCDOT, etc.). The additional undercut excavated area shall be backfilled with stone bedding material. Unauthorized undercut excavation shall be backfilled with stone bedding material and compacted as directed by the responsible agency. The Contractor shall conduct undercut operations in such a way that the responsible agency can take the necessary measurements before any backfill is placed. Any material removed and backfilled without the approval of the responsible agency, and/or all necessary measurements taken, and/or to a depth, length or width exceeding the dimensions shall not be considered undercut excavation. All undercut excavation shall be in accordance with the NCDOT Standard Specification for Roads and Structures (most recent edition), or the responsible agency's specifications.

Excavation for manholes, meter vaults, or similar structures shall leave a minimum of 12-inches clear space around the structure. Removal of unsuitable material shall be as specified above. Preparation of the subgrade shall be in accordance with the applicable detail and as directed by the Public Works Commission.

PIPE LAYING

All pipe shall be installed in accordance with PWC Specification Section 02660 – Water Distribution, Specification Section 02730 – Sanitary Sewer Systems, and/or PWC Specification Section 02732 – Sewage Force Mains.

TRENCH SAFETY

All excavations shall comply with all Federal, State, and local rules and regulations. The Contractor shall have a trenching and shoring "competent" person on the job at all times when there is an open excavation. Under no circumstance shall an employee of the Public Works Commission be considered the “competent” person for the operation.

TRENCH STABILIZATION (SHORING)

The Contractor shall furnish, install, and maintain all necessary shoring to ensure a safe excavation. The method of shoring and excavation shall be in strict accordance with OSHA Regulations. The Contractor shall be responsible for installation, maintenance, and removal of all trench stabilization measures. The Contractor shall be responsible for any damage to adjacent structures resulting from the installation, maintenance, removal, or absence of trench stabilization measures.

DEWATERING

Excavations shall be kept dry at all times. Any required dewatering shall be the Contractor’s responsibility. The Contractor shall be responsible for any damage to the adjacent property resulting from the installation, maintenance, discharge, and removal of the dewatering system. All discharge from the dewatering system shall be in accordance with the applicable erosion control rules and regulations.

BACKFILL

Backfill shall consist of suitable material free from debris, stone, etc. The backfill shall be brought up evenly on both sides of the pipe for the full length of the pipe. The backfill operation shall be conducted to prevent damage and/or movement of the pipe.

Backfill material in trenches shall be placed in layers not exceeding six (6) inches loose thickness to a point at least 12-inches above the pipe compacted to 90 percent maximum density. The remainder of the trench shall be backfilled in layers not exceeding six (6) inches in loose thickness compacted as specified in subparagraph COMPACTION. Each layer shall be thoroughly compacted by an approved mechanical tamping device.

Backfill material around structures shall be placed in a manner that the structure will not be damaged. No backfill shall be placed around manholes, thrust blocks, or similar structures until

the concrete has been allowed to cure for three (3) days. The backfill material shall be compacted as specified in subparagraph COMPACTION.

No backfilling will be allowed when weather conditions prevent compliance with these Specifications.

BORROW EXCAVATION (Select Backfill)

Borrow excavation material shall be supplied by the Contractor when sufficient quantities of suitable materials are not available within the project limits. The borrow material shall be approved by the Public Works Commission and shall not contain roots, root mats, stumps, highly plastic clay or other unsatisfactory materials. All borrow material shall be in accordance with the NCDOT Standard Specification for Roads and Structures, most recent edition.

COMPACTION

Backfill shall be compacted in accordance with the following table as a percentage of the maximum density at optimum moisture content as determined by the Standard Proctor Test, ASTM D-698.

Area	Percent ASTM D-698 Maximum Dry Density
Around and 1' above top of pipe	95
Remaining trench (within 4' of subgrade)	95
Pavement subgrade and shoulders	
Last 1' of fill (below subgrade)	100
Last 3' of fill to 12" below subgrade	98
Base material	100
Adjacent to structures (Areas not paved)	95
Under structures	98
Utility Outfalls (Cross Country)	95

Compaction testing may be performed at the option of the PWC Project Coordinator, or as required by the responsible agency (i.e., City of Fayetteville, NCDOT, etc.). Compaction testing shall be done in accordance with the responsible agency's requirements. Deficiencies shall be corrected by the Contractor without additional cost to PWC.

FINISHED EXCAVATION

All areas covered by the project shall be uniformly graded to the established elevations and approved cross sections. Ditches shall be graded to permit proper drainage. Newly graded areas shall be protected from traffic and/or from erosion, and any settlement or washing prior to acceptance shall be repaired and the required grades re-established. Ditches and drains along the subgrade shall be maintained to drain at all times. The finished subgrade shall be protected and maintained by the Contractor. The storage or stockpiling of materials on the finished subgrade shall not be permitted. No base course or pavement shall be laid until the subgrade has been checked and approved. All work shall be conducted in accordance with the environmental protection requirements of the Contract.

*** END OF SECTION ***

DIVISION 2
SITE WORK
02272 - EROSION CONTROL - GENERAL PROVISIONS

GENERAL

The Contractor shall be responsible for conducting his site grading and drainage operations in such manner as to prevent or lessen excessive soil erosion of the construction site work areas. He shall at all times provide satisfactory means to prevent or minimize the movement and washing of large quantities of soil. The Contractor is expected to review his site grading and drainage operations periodically to determine the areas most susceptible to erosion by excessive rainfall and periodically maintain all installed measures for the project duration. The Contractor shall correct any deficiencies or problem areas as directed by the Owner or the North Carolina Department of Environment and Natural Resources (NCDENR) inspector within 48 hours.

EXECUTION

The Contractor's attention is directed to the fact that unless exposed earth areas are properly cared for during construction, they may result in substantial sedimentation damage downstream from the construction area. He shall at all times provide satisfactory means to prevent or minimize the movement and washing of quantities of soil onto pavements or into adjacent ditches, swales, inlets, and drainage pipes, to avoid the possibility of these structures becoming clogged with soil. Should this happen as a result of erosion at the site of this construction, the Contractor will be required to immediately provide means for removal of the soil and/or debris from the structures to restore the proper functioning of these structures. The Contractor shall assume all responsibilities to the affected property owners for correction of all damages. The Contractor is expected to review his site grading and drainage operations periodically with the Owner with the view in mind of determining the areas most susceptible to erosion by excessive rainfall and shall take necessary temporary measures in sufficient time to minimize the washing away of the site soils that would likely occur before the areas are finished graded, topsoiled and planted. The temporary measures to be provided by the Contractor at the critical areas may consist of, but not limited to, any one or a combination of the following, or by other approved means selected by the Contractor:

Silt Fence
Gravel Construction Entrance/Exit
Inlet Protection

If any earthwork is to be suspended for any reason whatsoever for longer than 15 days, the disturbed areas shall be seeded with temporary vegetative cover or otherwise protected against excessive erosion during the suspended period. Suspension of work in any area of operation does not relieve the Contractor of the responsibility for the erosion control and temporary measures will not be considered cause for a change in the price bid.

MAINTENANCE

The Contractor shall inspect and maintain each erosion control measure until the project is stabilized and accepted. After each significant rainfall, the Contractor shall remove and dispose of silt accumulation from each individual measure. The following maintenance may be required for each specific erosion and sediment control measure:

Silt Fence: Fabric shall be removed and replaced whenever deteriorated to such an extent the effectiveness is reduced. The toe of the fabric shall be buried a minimum of 6 inches.

Gravel Construction Entrance/Exit: Periodic top dressing with two inches (2") of graded stone. Remove all objectionable materials spilled, washed or tracked onto public roadways.

Sediment Trap: Remove sediment and restore trap to original dimensions when accumulated silt volume equals ½ the design depth. Replace the contaminated gravel facing.

Gravel Inlet Protection: Remove sediment as necessary to provide adequate volume. Replace contaminated gravel facing if required.

Rip-Rap: Make repairs to dislodged stone and/or supplement as required if erosion occurs during heavy rainfalls.

REMOVAL

After the area has been stabilized and the project accepted, the Contractor shall remove all temporary erosion and sediment control measures. Silt fences shall be removed, sediment traps/pits and/or basins filled with suitable soil, compacted and seeded. The materials removed shall remain the property of the Contractor and shall be disposed of off-site, or may be reused in other locations if approved by the Owner.

*** END OF SECTION ***

DIVISION 2
SITE WORK
02273 - TEMPORARY SILT FENCE

GENERAL

The work covered by this section consists of furnishing, installing, maintaining and removing a water permeable filter type silt fence for the purpose of removing suspended particles from the water passing through it.

The quantity of temporary silt fence to be installed will be affected by the actual conditions which occur during the construction of the project. The quantity of temporary silt fence may be increased, decreased, or eliminated entirely at the direction of the Owner. Such variations in quantity will not be considered as alterations in the details of construction or a change in the character of the work.

MATERIALS

Either wood posts or steel posts may be used. Wood posts shall be a minimum of 6 feet long, at least 3 inches in diameter, and straight enough to provide a fence without noticeable misalignment. Steel posts shall be 5 feet long, 1 3/4 inches wide and have projections for fastening the wire to the fence.

Wire fence fabric shall be at least 32 inches high, and shall have at least 6 horizontal wires. Vertical wires shall be spaced 12 inches apart. The top and bottom wires shall be at least 10 gage. All other wires shall be at least 12½ gage.

Burlap shall be at least 36 inches wide and shall weigh at least 6.7 ounces per square yard. Other materials may be used in lieu of burlap, provided those materials have been approved by the North Carolina Department of Environment and Natural Resources (NCDENR).

Wire staples shall be No. 9 staple and shall be at least 1½ inches long.

INSTALLATION

The Contractor shall install a temporary silt fence as shown on the plans and details. The silt fence shall be constructed at the locations shown on the plans and at other locations directed by the Owner.

Posts shall be installed so that no more than 3 feet of the post shall protrude above the ground and at least 18 inches are driven into the ground. Filter fabric shall be attached to the wire fence fabric by wire or other acceptable means. The fabric shall be continual in length. The fabric shall extend into a 6"x 6" trench along the uphill side of the fence. The trench shall be backfilled and compacted. Place 6 inches of No. 57 stone along the toe of the fence to secure the fabric in place. The single stripe located approximately 6 inches form the silt fence outer edge should not be visible if the fabric and fencing are installed properly.

*** END OF SECTION ***

DIVISION 2
SITE WORK
02274 - GRAVEL CONSTRUCTION ENTRANCE/EXIT

GENERAL

The work covered by this section consists of furnishing, installing, maintaining and removing temporary gravel construction entrance/exits. The entrance/exit shall be located at points where vehicles enter and exit the project and as indicated on the plans to limit sediment "tracked" off the site.

Where there are differences or conflict between this specification and those requirements outlined in an approved Erosion Control Plan, the specifications in the erosion control plan shall take precedence

MATERIALS

The stone shall be two inch (2") to three inch (3") washed stone.

INSTALLATION

The Contractor shall install the gravel construction entrance as shown on the plans and details. The construction entrance shall be constructed at the locations shown on the plans and at other locations directed by the Engineer.

The area to receive the stone shall be cleared of all vegetation, roots and other objectionable materials. The subgrade shall be graded and properly compacted. Areas yielding shall be covered with engineering fabric or undercut as directed by the Engineer. The stone shall be placed, graded and compacted to a minimum depth of eight inches (8") and as shown on the plans. The minimum construction entrance dimensions shall be 50 feet in length and 12 feet in width. The construction entrance/exit shall be maintained and the stone supplemented throughout the life of the project and shall be removed upon stabilization and disposed of off-site at the Contractor's expense.

*** END OF SECTION ***

DIVISION 2
SITE WORK
02500 – TRAFFIC CONTROL

GENERAL

The purpose of these specifications is to outline the Contractor's requirements for furnishing, erecting, maintaining, relocating, and removing traffic control devices for the maintenance of traffic during the Contractor's construction operations. The Contractor shall furnish all labor, materials, accessories, equipment and tools for performing all required traffic control operations.

REFERENCES

All work shall be in accordance with:

A. The North Carolina Department of Transportation Standards and Specifications for Roads and Structures (most recent edition)
B. The North Carolina Department of Transportation Roadway Standard Drawings (most recent edition)
C. The Manual on Uniform Traffic Control Devices (MUTCD) – most recent edition
D. The North Carolina Supplement to the MUTCD
E. Section 01000 – Special Conditions, of these Contract Documents

REQUIREMENTS

TRAFFIC CONTROL PLAN

The Contractor shall submit a traffic control and phasing plan for the overall project to be reviewed and approved by the PWC Project Engineer, prior to starting construction. The Contractor shall obtain an approved copy of the traffic control plan for the overall project area prior to any excavation within roadways. The plan must indicate how traffic will be managed, signage to be used, and potential traffic patterns resulting from plan implementation. The plan shall be submitted to the PWC Project Engineer in accordance with Section 01000 "Special Conditions" and Section 01300 "Submittals" of these Contract Documents. Failure of the Contractor to submit the required traffic control plan sufficiently in advance shall not entitle the Contractor to any extension of Contract Time.

TRAFFIC CONTROL DEVICES

The Contractor working in public rights-of-way on streets open to vehicular traffic, shall be required to provide, erect, and maintain all necessary traffic control devices throughout the project area to include any connecting streets affected by construction activities. The Contractor shall provide a sufficient number of personnel, and take all precautions for the protection of the work and safety of the public. All traffic control devices in place shall be in accordance with the approved traffic control plan. All traffic control devices and device installation shall be placed and maintained in strict accordance with the resources listed above. The Contractor shall be liable for any damages resulting from using unapproved and/or inadequate work zone traffic control. Fayetteville Public Works Commission reserves the

right to stop any work for non-compliance. The Contractor shall have no claim for delay due to stoppage of work as a result of non-compliance.

TRAFFIC CONTROL PLAN AND ROAD CLOSURE NOTIFICATION

1. TRAFFIC CONTROL PLAN – The Contractor shall notify the PWC Project Engineer, in writing, by 5:00 p.m. Wednesday, indicating which roadways will be affected by the work the following week. The Contractor shall notify NCDOT of work to be done per the terms of the approved encroachment agreement. The PWC Project Engineer shall receive copies of all correspondence via fax or email (PWC fax 910-829-0203; email addresses will be provided at the pre-construction meeting).

   Traffic cannot be altered without notification and approval from the appropriate agency as outlined in the above paragraph. Failure to do so will result in the Contractor not being able to work within the street the next week.

   No work on the individual streets shall start until all the traffic control devices required for the particular work activity have been installed in accordance with the approved traffic control plan.

2. ROAD CLOSURE NOTIFICATION - When deemed to be in the best interest of the public, Fayetteville Public Works Commission and the Contractor, a street may be closed for a duration mutually agreed upon. The Contractor shall submit a request in writing to the PWC Project Engineer for approval to have a street closed. The PWC Project Engineer will forward the request to the appropriate agency (i.e., City, Hope Mills, NCDOT) for approval of the closure. The PWC Project Engineer will include their recommendation regarding approval or disapproval of the request. The PWC Project Engineer will respond in writing with any recommendation for approval or disapproval of the request.

   The request shall be submitted a minimum of five (5) business days prior to the desired closure date. The request shall include the street name and the limits of the closure based on the points of intersection. The request shall also state the proposed duration the street is to be closed and shall include a traffic control plan showing the detour route, traffic control devices, etc. The traffic control plan submitted shall be in accordance with the requirements listed in this Specification.

   Once the street closure has been approved, in writing, by the PWC Project Engineer, the Contractor accepts full responsibility for the closure, to include the installation, maintenance, and removal of all traffic control devices and all implied liability.

TRAFFIC CONTROL LOOPS

The Town of Hope Mills, City of Fayetteville, and NCDOT maintain traffic detection loops at various intersections throughout the project limits. Due to the location of the proposed utility improvements, it may be necessary for these detection loops to be damaged. The Contractor shall coordinate with the appropriate agency a minimum of three (3) days prior to excavating, in order for the agency to locate these loops, or make any necessary revisions to the traffic signal facilities.

The agency will hire a third-party contractor to repair the damaged traffic detection loops. The invoice for this work shall be submitted to the Contractor for payment. The cost for this shall be incidental to the Contract.

STEEL PLATING ROADWAYS

Steel plating shall not be used without the prior written approval of the Project Engineer. The Contractor shall submit their proposed plan to utilize steel plates a minimum of five (5) working days prior to the proposed activity. Plating shall only be considered if the trench depths are 14 feet or greater. Should plating be approved the Contractor shall adhere to the following:

1. The trench shall be adequately shored to support bridging and traffic loads.
2. The trench box shall be sealed so there are no open voids.
3. Steel plates shall rest on trench box.
4. Steel plates shall extend beyond the outer edges of the trench box on all four sides.
5. There must be a minimum of two (2) feet of compacted backfill above steel plates.
6. Compacted backfill shall match existing street grade.
7. Provide documentation that the plates are capable of supporting potential loads.

Steel plating shall not exceed two (2) consecutive calendar days in any given week. However, provided that work is progressing in that particular section of sewer the Contractor may be allowed to utilize plating for a longer duration as approved in writing by the Project Engineer.

STEEL PLATING ROADWAYS (NCDOT STREETS)

Steel plating shall not be used without the prior written approval of Fayetteville Public Works Commission Project Engineer. The Contractor shall submit their proposed plan to utilize steel plates a minimum of five (5) business days prior to the proposed activity. Should plating be approved, the Contractor shall adhere to the following:

1. The plates shall be secured against any movement from traffic. Options include "countersinking" the plates to be flush with the existing pavement, or bolting the plates to the pavement.
2. The plates shall overlap the excavation a minimum of two (2) feet on all sides.
3. The plates shall be sufficient to withstand the expected traffic loads.
4. Provide documentation that the plates are capable of supporting potential loads.

Steel plating shall not exceed two (2) consecutive calendar days in any given week. However, provided that work is progressing in that particular section of the project, the Contractor may be allowed to utilize plating for a longer duration as approved in writing by Fayetteville Public Works Commission Project Engineer.

<u>MATERIALS</u>

A. The Contractor shall utilize interim pavement marking paint as specified in the North Carolina Department of Transportation Standards and Specifications for Roads and Structures (most recent edition)

B. Traffic cones may be utilized when approved by Fayetteville Public Works Commission Project Engineer. If approved, traffic cones shall either be double stacked or weighted to prevent movement by traffic.
C. All traffic control devices furnished by the Contractor shall remain the property of the Contractor, unless otherwise specified in these Contract Documents.

INSTALLATION

The furnishing, erecting, maintaining, relocating, and removal of traffic control devices shall be in accordance with the MUTCD (most recent edition), the requirements outlined in the approved traffic control plan, and these Contract Documents.

All traffic control devices shall be in place prior to the Contractor beginning work, removed during intervals when work is not on-going, and removed at the end of each business day (unless otherwise approved, as outlined in this specification).

The Contractor shall not obstruct or impede any traffic on adjacent streets, during the installation or removal of the traffic control devices, or during construction.

The Contractor shall not close a lane to through traffic after normal working hours and during periods of construction inactivity, unless otherwise approved in writing by Fayetteville Public Works Commission Project Engineer.

Fayetteville Public Works Commission Project Engineer may restrict the Contractor from placing lane closures during certain hours, holidays, or as deemed necessary for the convenience of the public. All lane closure types, hours of installation, and durations shall be as approved in writing by Fayetteville Public Works Commission Project Engineer.

The use of police and/or trained flaggers to control traffic through the work site shall be provided by the Contractor as required. The Contractor shall be responsible for obtaining trained personnel to direct traffic and contacting local authorities for use of police for traffic control where applicable.

INTERIM PAVEMENT MARKINGS

The Contractor shall be required to place interim pavement markings (centerlines, lane lines, edgelines, railroad, and school symbols) daily on any street with existing pavement markings that have been obliterated.

THERMOPLASTIC PAVEMENT MARKINGS

The Contractor shall be required to place thermoplastic pavement marking centerlines, lane lines, and edge lines within three (3) calendar days after the completion of the resurfacing operation.

The Contractor shall be required to place all thermoplastic pavement marking symbols (arrows, crosswalks, stop lines, school symbols, railroad symbols, raised pavement markers, etc.) within seven (7) calendar days of the completion of the project.

NCDOT STREETS

All traffic control measures for work within NCDOT road rights-of-way shall be in accordance with the approved NCDOT encroachment agreement, and as specified herein. Where there is a conflict between the requirements of this specification and the approved encroachment, the requirements of the approved encroachment shall govern.

END OF SECTION

DIVISION 2
SITE WORK
02573 - PERMANENT PAVEMENT PATCH

GENERAL

Permanent pavement patching shall be completed as indicated on the Contract Plans and in accordance with these Contract Documents. The intent and purpose of these specifications is to require a complete and satisfactory installation in every respect and any defect in material or workmanship shall be cause for replacement and correction of such defect as directed by the Public Works Commission. All materials and workmanship shall be in complete accordance with the standards and specifications of the Public Works Commission and subject to Public Works Commission inspection and approval. The materials and installation shall conform to the North Carolina Department of Transportation (NCDOT) Standards, (latest revision), the NCDOT HMA/QMS Manual (latest revision), and as specified herein.

REMOVAL

The Contractor shall cut the existing pavement to straight uniform widths parallel and perpendicular to the roadway. Jagged saw cuts will not be acceptable. The pavement shall be removed its entire depth. The Contractor shall properly dispose of all removed pavement. If the Contractor elects to mill the asphalt, the millings cannot exceed two (2) inches in size, and shall be swept into the trench and re-compacted. The removal limits shall extend a minimum of six (6) inches into solid undisturbed base course prior to patching or as directed by the Public Works Commission.

Pavement removal shall not exceed 3,000 feet total for the entire project at one time. It shall be the Contractor's responsibility to maintain the trench (swept, wetted, compacted, etc.) until paved.

PAVEMENT

Replacing the pavement shall consist of the following:

Tack Coat

All existing pavement edges shall be tacked in accordance with the North Carolina Department of Transportation Standard Specifications for Roads and Structures (latest revision).

Asphalt Surface Course

The asphalt surface course shall be Type S9.5, placed in accordance with the PWC Standard Detail M.2. All asphalt surface course shall be in accordance with the NCDOT HMA/QMS Manual (latest revision) and the North Carolina Department of Transportation Standard Specifications for Roads and Structures (latest revision).

The pavement repair shall be constructed to the line, grade, crown and cross section of the existing street. The asphalt plant mix shall be compacted to density in accordance with the HMA/QMS Manual (latest revision). The Contractor shall provide a smooth transition from the

existing pavement to the top of the backfill, so as to have no vertical drop (in any direction). The transitions shall only be removed the day of patch paving.

The permanent pavement patch shall be made within 30 days of installation of the line. If settlement should occur within one (1) year warranty period, the Contractor shall be required to remove asphalt, re-compact base and sub-base, and re-patch any areas of settlement at no expense to PWC. All repairs shall be in accordance with these Contract Documents.

Base Course

The base course shall be aggregate base course (ABC) installed to a minimum eight (8) inches thickness (compacted) and extending a minimum of six (6) inches beyond the edge of the trench as indicated on the PWC Standard Detail M.2. The base course shall be compacted to 100% maximum dry density at optimum moisture content as determined by the AASHTO T-99 as modified by NCDOT.

The Contractor, with permission of the Public Works Commission, may use asphalt concrete intermediate course, placed in a minimum four (4) inch layer extending a minimum of six (6) inches beyond the edge of the trench as indicated on the Permanent Patch Detail. The Asphalt Concrete Intermediate Course shall be in accordance with the North Carolina Department of Transportation Standard Specifications (latest revision), and the NCDOT HMA/QMS Manual (latest revision).

Prior to patch paving, the Contractor shall remove the upper ten (10) inches of backfill, if ABC is to be used or upper six (6) inches if Asphalt Concrete Intermediate Course is to be used, in the trench. All asphalt edges along the trench shall be cut straight, uniform width, parallel and perpendicular to the road with no jagged edges. The outer six (6) inches (minimum) of the trench adjacent to the newly removed asphalt shall be on undisturbed soil.

The pavement repair shall be constructed to the line, grade, crown and cross section of the existing street. The asphalt plant mix shall be compacted to density in accordance with the HMA/QMS Manual.

Maintenance shall be performed at least weekly, after a rainfall, or at the direction of the Public Works Commission. Maintenance shall include sweeping the adjoining pavement, blading, wetting and compacting the stone to insure smooth drivable surface.

END OF SECTION

02660 - WATER DISTRIBUTION

GENERAL

Water lines and all appurtenant items shall be constructed of materials specified and/or as indicated on the approved drawings. The intent and purpose of these specifications is to require a complete and satisfactory installation in every respect and any defects in material or workmanship shall be cause for the replacement and correction of such defect as directed by Fayetteville Public Works Commission (PWC) at no expense to Fayetteville Public Works Commission.

RELATED SECTIONS

A. 02211 – Grading, Utilities
B. 02222 – Excavation and Backfilling for Utility Systems
C. 02301 – Boring And Jacking (Roadways And Railroads)

MATERIALS

MANUALLY OPERATED GATE VALVES

All manually operated gate valves four (4) inches and larger shall be ductile iron or cast iron body resilient wedge type rated for 250 psig working pressure gate valves and shall conform to American Water Works Association (AWWA) C-509/C-515 and NSF 61. All valves must open counter-clockwise equipped with a two (2) inch square operating nut. The operating nut shall have an arrow cut in the metal, indicating the direction of opening. All valves shall have a non-rising stem. All valves up to and including thirty-six (36) inch diameter shall have triple "O" ring stem seals. The design and machining of valves shall be such as to permit the replacement of the upper two (2) "O" rings without undue leakage while the valve is wide open and in service. The wedge shall be ductile iron encapsulated in nitrile rubber (for four (4) inch through 12 inch) and SBR rubber for 14-inch through 24-inch sizes.. All internal and external surfaces of the valve body and bonnet shall have a fusion bonded epoxy coating complying with ANSI/AWWA C550 applied electrostatically prior to assembly, conforming to AWWA C-550-90. All valves up to and including 36-inch diameter shall have a safe working pressure of 250 psi. Valve connections shall be as required for the piping in which they are installed. Valves shall have a clear waterway equal to the full nominal diameter of the valve. All valves shall be tested for leakage and distortion in strict accordance with the latest revision of AWWA Specification C-500.

Gate valves installed in meter vaults shall have a wheel in lieu of a square operating nut and shall also have a non-rising stem. The wheel shall have an arrow cut in the metal indicating the direction of opening. Flanges shall not be buried. An approved pit shall be provided for all flange connections.

Resilient seated tapping valves shall be furnished with the tapping flange having a raised face or lip designed to engage the corresponding recess in the tapping sleeve flange in accordance with MSS-SP60. Tapping valves without the raised face on the tapping flange are not permitted since they do not assure the proper alignment required to prevent damage by a misaligned shell cutter. The interior of the waterway in the body shall be a full opening and capable of passing a full sized shell cutter equal to the nominal diameter of the valve.

All valves shall be manufactured in strict accordance with the latest specifications of the American Water Works Association (AWWA). Valves shall be manufactured by: Mueller Company, Clow Corporation, or American Darling Company. Certification shall be furnished to Fayetteville Public Works Commission by the manufacturer that all valves are in accordance with PWC standards. Where specified on the plans and approved by Fayetteville Public Works Commission, resilient wedge gate valves may be furnished with spur gearing for valves installed in a vertical position and bevel gearing for valves installed in a horizontal position. All gate valves shall be installed in accordance with PWC standard details.

BALL VALVES

For all valves smaller than four (4) inches, ball valves shall be used. Ball valves shall be installed in accordance with PWC standard details.

Ball valves shall be all bronze construction, with tee head operator and having a removable disc. Ball valves shall have threaded connections, in accordance with PWC standard details. Ball valves shall be manufactured and tested in accordance with AWWA/ANSI C800. The valve shall be equipped with packing nut, gland, and packing material. Ball valves shall be of an approved type made from approved materials conforming to ASTM Specifications and shall also meet the approval of the Public Works Commission. The turn required to travel from fully closed to fully open on the ball valve shall be 90 degrees.

VALVE BOXES

Valve boxes shall be "slip-type" made of close-grained, gray cast iron metal painted with a protective asphaltic coating. Construction shall be in three pieces as follows: The lower of base pieces, which shall be flanged at the bottom, the upper part which shall be flanged on the lower end, and of such size as to telescope over the lower part, the upper end being constructed in the form of a socket to receive the cap or cover; and the cover or cap shall have cast on the upper surface, in raised letters, the word "WATER". All valve boxes shall be equal in quality and workmanship to those manufactured by Sigma Corporation (VB-462), Tyler Union (6855 Series), Star Pipe Products (VB-0004), or an approved equal. The valve box shall be installed in accordance with PWC standard details. The valve box shall have a 3/8-inch hole drilled in the upper part four (4) to six (6) inches from the top of the box to accommodate a ¼-inch x 1-1/2-inch galvanized bolt for securing tracer wire.

Valve box protector rings shall be installed to protect valve boxes located outside pavement. The ring shall be constructed and installed in accordance with PWC standard details.

FIRE HYDRANTS

All fire hydrants shall be dry barrel, traffic type and conform to the latest revision of AWWA Specification C-502 except as listed below or as otherwise directed by the Public Works Commission. All working parts shall be bronzed. The size of the fire hydrants (designated by the nominal diameter of the valve opening) shall not be less than four and one-half (4 ½) inches. All hydrants shall be able to deliver a minimum of 1,000 gallons per minute with a friction loss of not more than five (5) pounds per square inch (psi) total head loss through the hydrant. Hydrants shall be of compression type (opening shall be of such design that when the barrel is broken off the hydrant valve will remain closed and reasonably tight against leakage). All hydrants shall be mechanical joint to accommodate the spigot end of six (6) inch Pressure Class 150, AWWA

Standard, ductile iron pipe. The installation of the fire hydrant shall be in accordance with PWC standard details. Bosses (6") may be substituted for tees in pipe sizes exceeding 24 inches in diameter, with prior approval from PWC. The boss shall be welded to the bottom of the main to provide effective flushing of the system.

All hydrants shall be furnished with two (2) two and one-half (2 ½) inch nozzles and one (1) four and one-half (4 ½) inch pumper nozzle. Outlets shall have American National Standard fire hose coupling thread, in accordance with the City of Fayetteville standard, and shall be provided with nozzle caps securely chained to the body of the hydrant. The base of the hydrant shall have two (2) cast lugs suitable for use in strapping the hydrant to the connecting pipe. The operating nut shall be pentagonal in shape, finished with a slight taper to one and one-half (1 ½) inches from point to flat to conform to the standard wrench used by Fayetteville Public Works Commission. All hydrants shall open left or counter-clockwise. Hydrants shall be suitable for working pressure of 150 psi and a test pressure of twice the working pressure. Fire hydrants shall be specific models manufactured by Mueller Company (Model Centurian 200), Clow Corporation (Medallion), American Darling (Model Mark 73-1) or approved equal. The interior of the hydrant shoe shall be coated with a four (4) mil thickness FDA approved epoxy coating.

COMBINATION AIR VALVES ASSEMBLY

Combination air valves shall be of the single housing style that combines the operation features of both an air/vacuum and air release valve. The combination air valve shall have a two (2) inch inlet and one (1) inch outlet connections and an orifice diameter to be determined by the Design Engineer for each project for a maximum working pressure of 300 psi. The assembly shall be equipped with a two (2) inch cut-off valve as shown on the PWC standard detail. The combination air valve body shall be constructed of 316 stainless steel or reinforced nylon with the only exception being the Buna-N Rubber seat and gasket. Valves shall be as manufactured by Crispin (Model UX20), ARI (D-020), or approved equal. Combination air valves shall be installed in accordance with PWC standards.

WATER DISTRIBUTION PIPE

DUCTILE IRON PIPE

The raw material from all ductile iron pipe and fittings shall have an average minimum content consisting of 90% recycled iron and steel. Ductile iron pipe and fittings shall be manufactured in the United States of America in accordance with ANSI/AWWA A21.51/C151. The manufacturer of the ductile iron pipe shall be a member of the Ductile Iron Pipe Research Association (DIPRA).

All ductile iron pipe shall be designated as “Pressure Class”, unless otherwise specified. The pipe furnished shall have a minimum thickness calculated in accordance with ANSI A 21.50 (AWWA C-150), with a factor of safety of two (2); a working pressure of 150 psi to 350 psi, plus 100 psi water hammer allowance; and AASHTO H-20 live truck load with 2.5 feet of cover. In no case shall “Pressure Class” pipe’s nominal thickness be less than the following:

SIZE	PRESSURE CLASS	NOMINAL THICKNESS (In.)
4"	350	0.25
6"	350	0.25
8"	350	0.25

10"	350	0.26
12"	350	0.28
16"	250	0.30
24"	250	0.37

PUSH-ON JOINTS

Push-on joints shall be as specified and installed in accordance with AWWA C-600 and shall conform to AWWA Standard C-111. Push on joints, rubber gaskets and lubricant shall conform to ANSI A21.11. Pressure rating shall not be less than 200 psi unless otherwise specified. All ductile iron pipe shall be lined with standard thickness cement mortar lining and asphaltic seal coat in accordance with ANSI A21.4 (AWWA C-104). The pipe shall have an outside asphaltic coating as specified in AWWA Standard C-151.

RESTRAINED JOINTS

Factory Restrained Joints

Factory restrained joint pipe shall be utilized for all pipe greater than 12-inches in diameter, unless otherwise approved by Fayetteville Public Works Commission. Factory restrained joint pipe shall be furnished for the locations shown on the approved drawings. The pipe, joints, and gaskets shall be in accordance with ANSI/AWWA Standards as specified for ductile iron pipe. Factory restrained joints shall be rated for a working pressure of 350 psi for sizes up to 12-inches and 250 psi for larger sizes.

All factory restrained joint pipe shall have the restraints internal to the pipe (i.e., “boltless”). All restrained joint ductile iron pipe and fittings larger than 12-inches shall be as manufactured by U.S. Pipe’s TR-Flex, Griffin Pipe Products SNAP-LOK, American Cast Iron Pipe Company's Flex-Ring Joint, or approved equal. The method of restraining the valves to the factory restrained ductile iron pipe shall be reviewed and approved by PWC on a case by case basis. The valves shall have the same working pressure as the pipe.

Flanged Joints

Flanges shall be specifically designed for each application. The flange pipe shall be in accordance with ANSI/AWWA C-115/A21.15. Threads for threaded flange pipe shall be in accordance with ANSI B2.1, shop fabricated as outlined by AWWA 115 with serrated faces furnished on the pipe, completely factory installed. Welding of flanges to the body of the pipe will not be acceptable.

Ductile iron fittings and flanges shall be in accordance with ANSI/AWWA C-110/A21.10 with a minimum working pressure of 250 psi. Gaskets shall be full faced SBR rubber per ANSI/AWWA C-111/A21.11 with a minimum 1/8 inch thickness. Linings and coatings shall be as previously outlined for all ductile iron pipe and fittings.

Mechanical Joints

Mechanical joints shall be as specified and installed in accordance with AWWA C-600 and shall conform to AWWA Standard C-111. Mechanical joints shall be of the stuffing box type and shall conform to ANSI A21.11 for four (4) inch pipe through 12-inch pipe. Mechanical joints, rubber

gaskets and lubricant shall conform to ANSI A21.11. Pressure rating shall not be less than 200 psi unless otherwise specified.

Special accessories such as mechanical joint retainer glands or mega-lugs are acceptable on pipe 12-inches and less in diameter, upon approval from Fayetteville Public Works Commission. Mega-lug and/or grip-ring restraint mechanisms will not be an acceptable method of restraint for pipe, fitting and/or valves on sizes larger than 12-inches in diameter. For mains larger than 12-inches and at locations specified by Fayetteville Public Works Commission, factory restrained joints shall be utilized, in accordance with these Specifications.

Field Lok Gaskets

Special accessories such as US Pipe's Field-LOK gasket, Ford's Uni-Ring, or Romac's Grip-Ring are acceptable on pipe 12-inches and less in diameter, upon approval from Fayetteville Public Works Commission. Mega-lug and/or grip-ring restraint mechanisms will not be an acceptable method of restraint for pipe, fitting and/or valves on sizes larger than 12-inches in diameter. For mains larger than 12-inches and at locations specified by Fayetteville Public Works Commission, factory restrained joints shall be utilized, in accordance with these Specifications.

FITTINGS

Mechanical Joint

All fittings shall be ductile iron and shall be manufactured in accordance with AWWA Standard C-110 (ANSI A21.11). Compact fittings shall be mechanically restrained, ductile iron in accordance with ANSI A 21.53 (AWWA C-153) for four (4) inch through 12 inch sizes only. Where thrust blocking is utilized, fittings shall be full body ductile iron in accordance with ANSI A 21.53 (AWWA C110).

All ductile iron fittings shall be lined with standard thickness cement mortar lining and asphaltic seal coat in accordance with ANSI A21.4 (AWWA C-104). All fittings shall have an outside asphaltic coating as specified in AWWA Standard C-151 and C-110, respectively.

Factory Restrained

Factory restrained joint fittings shall be utilized for all pipe greater than 12-inches in diameter, unless otherwise approved by Fayetteville Public Works Commission. Factory restrained joint fittings shall be furnished for the locations shown on the approved drawings. The fittings, joints, and gaskets shall be in accordance with ANSI/AWWA Standards as previously specified for ductile iron pipe. Factory restrained joints shall be rated for a working pressure of 350 psi for sizes up to 12-inches and 250 psi for larger sizes. All factory restrained joint fittings shall have the restraints internal to the fitting (i.e., "boltless"). All fittings shall be compatible with the factory restraint system. All restrained joint ductile iron fittings larger than 12-inches shall be as manufactured by U.S. Pipe's TR-Flex, Griffin Pipe Products SNAP-LOK, American Cast Iron Pipe Company's Flex-Ring Joint, or approved equal.

Bosses

Tangential welded on outlets (i.e., bosses) shall only be utilized on pipe 24-inches and larger, as approved by PWC. All bosses shall be factory welded; field fabrication is not allowed. The pipe

shall be in accordance with these specifications. Bosses shall be of the size and location indicated on the approved drawings.

AERIAL CROSSINGS

For aerial crossings, the ductile iron pipe shall be thickness class, as specified on the plans and standard details. All thickness class pipe shall be in accordance with ANSI A21.51 and AWWA C-151, with a minimum working pressure of 200 psi.

For aerial crossings which are four (4) inches to 12 inches in diameter, Class 53 manufactured factory restrained joint or Class 53 flanged ductile iron pipe shall be used in accordance with the PWC standard details. No other means of restraint are allowed for aerial crossings. For aerial crossings larger than 12 inches, or as noted specifically on the plans, Class 53 flanged ductile iron pipe shall be used in accordance with the PWC standard details.

All aerial crossings shall be designed and installed in accordance with PWC standard details.

PIPE IN CASINGS

All ductile iron pipe (regardless of diameter) within casings shall be factory restrained, in accordance with these specifications and the applicable PWC standard details. The use of any other restraints (i.e., mega-lugs, grip-rings, etc.) shall not be utilized on pipe within casings.

All restrained joint ductile pipe in casings shall be in accordance with the PWC standard details.

TRENCHLESS APPLICATIONS

All ductile iron pipe (regardless of diameter) utilized for trenchless installations (i.e., horizontal directional drilling, pipe-bursting, etc.) shall be factory restrained, in accordance with these specifications and the applicable specification section for the trenchless technology. The use of any other restraints (i.e., mega-lugs, grip-rings, etc.) shall not be utilized.

PVC PIPE

Two (2) inch water main pipe shall be manufactured using Grade 1 PVC compound material as defined in ASTM D-1784 and shall be SDR21, pressure class 200 in accordance with ASTM D 2241. Fittings for two (2) PVC pipe shall be solvent weld Schedule 80 PVC. Brass FIP x pack joint for PVC fittings shall be used to transition from PVC to brass. The pipe shall be plainly marked with the manufacturer's name, size, material (PVC) type and grade or compound, NSF seal, date of manufacture, pressure rating and reference to appropriate product standards.

All PVC pipe (4-inches through 12-inches diameter) shall be manufactured using virgin compounds as defined in ASTM D-1784, with a 4,000 psi HDB rating and designated as PVC 1120 to be in strict accordance with AWWA C-900. The pipe shall be Class 150 and conform to the thickness requirements of DR18. The pipe shall be manufactured to withstand 755 psi quick burst pressure tested in accordance with ASTM D-1599 and withstand 500 psi for a minimum of 1,000 hours tested in accordance with ASTM D-1598. The pipe joints shall be of the integral bell type with rubber gaskets and shall conform to the requirements of ASTM D-3139 or ASTM F-477.

PVC fittings are not acceptable for water mains four (4) inches or greater. Fittings and specials shall be ductile iron, bell end in accordance with AWWA C-110, 150 psi pressure rating unless otherwise shown or specified. Ductile iron fittings to PVC pipe shall be adequately supported on a firm trench foundation. Ductile iron fittings and specials shall be cement mortar lined (standard thickness) in accordance with ANSI A21.4.

Mechanical restraining systems (i.e. mega-lug, grip-ring) shall not be used on PVC pipe.

TRACING WIRE

For the purpose of locating non-metallic pipes, a continuous "detectable" tracing wire shall be installed. The wire shall be a minimum 12 gauge, single strand, coated copper or copper clad steel wire that is suitable for underground use. Splices shall be accomplished utilizing a corrosion proof wire connector. The connectors shall “lock” the wires in place and contain a dielectric sealant to prevent corrosion. The connector shall be the “Snake Bite” connector manufactured by Copperhead Industries, LLC, or approved equal. The wire shall be buried continuously along the pipe. The wire shall be secured into valve boxes such that a direct/conductive metal detector may be used to trace the pipe location. Bolts shall be used to secure the wire and the attachment location shall be readily available from finished grade without special equipment.

POLYETHYLENE PLASTIC WATER TUBING

Polyethylene (PE) plastic water tubing shall be installed in accordance with PWC standard details. All services installed in new construction shall be one continuous run of pipe with no splices from the corporation stop to the meter. The PE water tubing shall meet the requirements of ASTM D2737, AWWA C901, and NSF Standards 14 and 61. Pipe dimensions shall meet Iron Pipe Size (IPS) standards.

The PE tubing material shall be high density polyethylene conforming to the minimum requirements of cell classification 445574E, as defined and described in ASTM D3350. The resin shall have a material designation code of PE4710 by the Plastic Pipe Institute.
The PE water tubing shall be SIDR 7, with a minimum pressure rating of 250 psi. Fittings for the PE water pipe shall be cast brass compression fittings, made to the PE water pipe dimension. All brass fittings shall have a 300 psi minimum pressure rating.

For the purpose of locating plastic water services during trenching, a continuous tracing wire shall be installed. The wire shall be a minimum 12 gauge, single strand, coated copper or copper clad steel wire that is suitable for underground use. The wire shall be buried along the water service lateral from the main to the meter box. The wire shall extend a minimum of 12 inches into the meter boxes.

COPPER WATER TUBING

Copper water tubing shall be installed in accordance with PWC standards. All services installed shall be one continuous run of pipe with no splices from the corporation stop to the meter.

Copper water tubing shall be Type K, soft copper manufactured in accordance with ASTM B88. The minimum pressure rating for the copper water pipe shall be 655 psi. Fittings for the copper water pipe shall be brass compression fittings, made to the copper water pipe dimensions. All brass fittings shall have a 300 psi minimum pressure rating.

TAPPING SLEEVES

Tapping sleeves shall be ductile iron mechanical joint or stainless steel and have a minimum working pressure of 150 psi for all tapping of mains up to and including 24-inch diameter with a branch less than or equal to 12-inches diameter. Branch diameter greater than 12-inches on a 16-inch diameter pipe and larger shall require full body ductile iron mechanical joint tapping sleeve.

Ductile iron mechanical joint tapping sleeves shall be as manufactured by Clow, M&H, Mueller, American, or an approved equal and shall be furnished with complete joint accessories. The mechanical joint sleeve shall be compatible with type and class of pipe being tapped. The outlet flange shall be class 125 per ANSI B16.1 compatible with approved tapping valves.

Stainless steel tapping sleeves shall be as manufactured by Romac, Smith-Blair, or approved equal, and shall be furnished with all accessories. The sleeve, lugs, bolts and nuts shall be 18-8 type 304 stainless steel, as provided by the manufacturer. The outlet flange shall be ductile iron or stainless steel. The gasket shall be a grid pattern design and shall provide full circumferential sealing around pipe to be tapped. The sleeve shall include a 3/4 NPT test plug. All welds shall be passivated. The outlet flange shall be class D per AWWA C-207-ANSI 150 lb. drilling compatible with approved tapping sleeves.

The tapping sleeve and valve shall be in accordance with PWC standard details.

All tapping sleeves shall be hydrostatically pressure tested prior to the tap being accomplished. **Use of air to complete the pressure test is not acceptable.** The tapping sleeve shall be tested to 150 psi. The PWC Project Coordinator shall witness and approve the testing.

WATER SERVICE SADDLES

All water service saddles for use on two (2) inch PVC shall be one (1) inch brass saddles as manufactured by Ford, McDonald, or Mueller.

Water service saddles for one (1) and two (2) inch taps on four (4), six (6), eight (8), 12-inch and larger size PVC and asbestos-cement (AC) and also four (4) inch and larger size iron pipe shall be ductile iron with stainless steel strap(s), bolts, nuts and washers. Ford Models FS 101, FS 202; Romac Models 101S, 202S; or Smith-Blair Model 315.317 shall be used. Stainless steel straps must be pre-formed at the factory to the specified outside diameters of the pipe.

Water service saddles with a two (2) inch outlet shall be double strap.

Water service saddles for pipe sizes 12-inch through 24-inch shall be double strap.

Water service saddles for pipe sizes exceeding 24-inches shall be as specified by the PWC Water Resources Engineering Department.

INSTALLATION

GENERAL

Pipe installation shall be in strict accordance with Specification Section 02222 – Excavation and Backfilling for Utility Systems and as outlined herein.

PIPE INSTALLATION

Pipe installation shall be in accordance with the manufacturer's instructions. All pipes and fittings shall be handled to prevent damage to the protective coatings and linings.

All dust, dirt, oil, tar, or other foreign matter shall be cleaned from the jointing surfaces, and shall be lubricated with lubricant recommended by the manufacturer.

All pipe shall be installed in accordance with the approved drawings and cut sheets, unless otherwise directed by PWC.

All dead ends on new mains shall have a two (2) inch blow-off assembly as indicated on the approved drawings. The blow-off assembly shall be in accordance with PWC standard details.

For pipe sizes up to 12-inches, mechanical equipment should not be utilized to assemble the pipe. For pipe sizes over 12-inches, mechanical equipment may be utilized, in accordance with the pipe manufacturer's instructions. Any damage resulting from the use of mechanical equipment shall be replaced as directed by PWC.

Adjustments in grade by exerting force on the barrel of the pipe with excavating equipment shall not be allowed. The Contractor shall verify line and grade after assembling each joint.

When pipe installation is not in progress, the open ends of the pipe shall be closed by a water tight plug or other means approved by the PWC Project Coordinator. If water is present, the plug shall remain in place until the water is lowered to a level that allows for proper installation. No pipe shall be laid in water or where in the PWC Project Engineer's and/or PWC Project Coordinator's opinion trench conditions are unsuitable. Every precaution shall be taken to prevent material from entering the pipe while it is being installed.

ALIGNMENT AND GRADE

The Contractor shall be responsible for installing the pipe and appurtenances to proper line and grade.

All ductile iron pipe and fittings shall be installed in accordance with ANSI/AWWA C-110/A21.10. All C-900 pipe shall be installed in accordance with ASTM D-2774. The amount of deflection in the PVC or ductile iron pipe shall not exceed the applicable AWWA standards and the manufacturer's recommendations. If the required deflection exceeds the specified limitations or as determined by the Public Works Commission, mechanical joint bends shall be utilized.

Pipe passing through walls of NCDOT bridges, retaining walls, and other concrete structures shall be factory restrained joint ductile iron and be installed in casings/sleeves in accordance with NCDOT specifications. Annular space between walls and sleeves shall be filled with an approved cement mortar that meets NCDOT specifications. The annular space between the sleeve and the pipe shall be filled with an approved mastic.

Pipe passing through the walls of meter vaults, valve pits, and storm drainage structures shall be restrained joint ductile iron, as specified by PWC. Pipe shall be installed in a casing/sleeve if determined to be necessary. Annular space between walls and sleeves shall be filled with an approved cement mortar. Annular space between pipe and sleeves shall be filled with an approved mastic. Proposed conflict boxes with storm and water shall be reviewed by the PWC Water Resources Engineer and approved on a case by case basis.

All ductile iron pipe (regardless of diameter) within casings shall be factory restrained, in accordance with these specifications and the applicable PWC standard details. The use of mechanical restraints (i.e., mega-lugs, grip-rings, etc.) shall not be utilized on pipe within casings.

When pipe is field cut, the cut end shall be smooth and at right angles to the axis of the pipe. All sharp edges shall be removed. All field cut pipe shall be beveled. The beveled end of PVC pipe shall be removed, when installing into mechanical joint ductile iron fittings.

When connecting unlike (class, material, etc.) pipe, an approved PWC fitting shall be used. All pipe shall be installed in accordance with AWWA C-600 or C-605 as applicable, for buried lines and the manufacturer's recommendations. For mechanical joint pipe and fittings, all nuts shall be torqued to the manufacturer's recommendations.

Concrete thrust blocking shall be utilized on all PVC water mains. The concrete thrust blocking shall be in accordance with PWC standard details. When thrust blocking is to be utilized, backfilling shall not occur until the concrete has time to set. No hydrostatic pressure testing shall occur until the concrete thrust blocking has cured for a minimum of five (5) calendar days.

FIRE HYDRANTS

Fire hydrants shall be installed as shown on the approved drawings. Each fire hydrant shall be connected to the main with a six (6) inch branch line and shall have a minimum of 42-inches of cover. Fittings between the valve and fire hydrant may be utilized, with prior approval from PWC. The valve shall be located at the main unless otherwise approved by PWC. Hydrants shall be set plumb with pumper nozzle facing the roadway. The hydrant branch shall not be backfilled until inspected and approved by the PWC Project Coordinator. Fire hydrants shall be installed in accordance with PWC standard details.

HYDROSTATIC TESTS

All mains and laterals shall be subjected to a hydrostatic pressure test. Each valved section maybe tested individually.

The Contractor shall furnish all labor and material, including test pumps, taps, and corporations, necessary to complete the work. Any taps which are not to be utilized shall be killed out at the main. If any taps are to be used for irrigation laterals they shall be installed in accordance with PWC standard details. A PWC Project Coordinator shall be present and observe all valve operation by the Contractor. Under no circumstances shall a Contractor operate any PWC-owned valves unless it is an emergency.

The duration of the pressure test shall be at least one hour or longer, as directed by the PWC Project Coordinator. The hydrostatic pressure shall be 200 psi. The pipe to be tested shall be slowly filled with water and the specified test pressure shall be applied. Before applying the

specified test pressure, all air shall be expelled from the pipe. If hydrants or blow offs are not located to properly expel the air, taps shall be made as approved by PWC.

Damaged or defective materials discovered as a result of the pressure test shall be removed and replaced with new material, and the test shall be repeated until the test results are satisfactory to the Public Works Commission.

All replacement, repair or retesting shall be accomplished by the Contractor at no additional cost to the Public Works Commission. All repairs shall be reviewed and approved by PWC prior to backfill. The use of couplings, fittings, sleeves, etc. shall be reviewed and approved by PWC prior to use. The main must successfully pass the hydrostatic test prior to sterilization.

STERILIZATION

Sterilization shall be in accordance with the requirements of NCDEQ, the North Carolina Rules Governing Public Water Supply, AWWA C651, and AWWA C655 (most recent editions). The Contractor shall furnish all chlorinating equipment, sterilization solution, materials, excavation, barricades, backfilling, and any taps and corporations necessary to complete the work. The Contractor shall fully cooperate with the PWC Project Coordinator, furnish any needed assistance, and schedule the testing.

Prior to performing the hydrostatic test, water mains, laterals, and appurtenances shall be flushed to remove air, sediment, contaminants, and/or foreign matter. After completion of a successful hydrostatic test, the water system shall be disinfected by the thorough dispersion of a chlorine solution. The chlorine level shall be between 50 parts per million (ppm) and 100 ppm throughout the water system. In no case shall the chlorine level exceed 300 ppm. If the chlorine level is over 300 ppm, the system shall be completely flushed and re-chlorinated. **In no case shall chlorine be introduced into the water system in a dry solid state.**

The chlorine solution shall remain in contact with the interior surfaces of the water system for a minimum period of 24 hours and shall result in not less than 10 ppm of chlorine throughout the system. Then the water system shall be flushed with water from the existing PWC water system until the chlorine solution is dispelled. The Contractor shall take all necessary measures to prevent downstream erosion caused by flushing the lines. All erosion/damages shall be repaired at no additional expense to the Public Works Commission. All environmental regulations governing the release and/or disposal of chlorinated testing water shall be met by the Contractor. AWWA C655 defines "highly chlorinated" water as water having more than four (4) ppm. Any water with a chlorine level greater than four (4) ppm shall be de-chlorinated by the Contractor prior to being released to the environment.

If any disruption to the disinfection process occurs, or if any repair procedure is necessary then the disinfection process shall start over.

After disinfection, the water supply shall not be accepted or placed into service until bacteriological tests results or representative water samples analyzed in the Public Works Commission's laboratory are found to be satisfactory. The disinfection shall be repeated until tests indicate the absence of pollution for at least two (2) full days. The PWC Project Coordinator shall be responsible for taking the sample(s) and transporting them to the PWC laboratory.

If the initial sample taken after disinfection and flushing does not indicate that the water main is sterilized, the Contractor shall, in conjunction with the PWC Project Coordinator, flush the lines. Once flushing is complete, another sample will be taken to the Public Works Commission's laboratory for analysis. Should this second sample also fail to indicate that the main is sterilized; the Contractor shall repeat the disinfection process. This process shall be repeated until the samples are satisfactory. The Contractor shall fully cooperate with the PWC Project Coordinator, furnish any needed assistance, and schedule the testing.

END OF SECTION

DIVISION 2
SITE WORK
02680 - EPOXY LINING OF WATER MAINS

SCOPE

The intent and purpose of these specifications is to require a complete and satisfactory rehabilitation of existing water mains utilizing an epoxy lining system. The Contractor shall furnish all necessary labor, materials, equipment, services, and incidentals necessary to rehabilitate the existing water mains using epoxy lining. Any defects in material or installation shall be cause for the replacement and correction of such defect as directed by the PWC Project Engineer at no expense to the Public Works Commission.

RELATED SECTIONS

A. Section 02222 – Excavation, Trenching, and Backfill for Utility Systems
B. Section 02272 – Erosion Control - General Provisions
C. Section 02660 – Water Distribution
D. Section 02760 – Television Inspection

QUALITY ASSURANCE

The Contractor is solely responsible for quality assurance during the length of the project. The Contractor shall be responsible for any costs associated with corrective measures required to replace or repair items not meeting the quality standards specified by the Public Works Commission.

WARRANTY

The Contractor shall warrant to the Public Works Commission that the equipment used on this Contract where covered by patents or license agreements is furnished in accordance with such agreements and that the prices included herein cover all applicable royalties and fees in accordance with such license agreements. The Contractor shall defend, indemnify and hold the Public Works Commission harmless from and against any and all costs, loss, damage or expense arising out of or in any way connected with any claim of infringement of patent, trademark or violation of license agreement.

MATERIALS

EPOXY RESIN LINING

The epoxy resin and hardener shall be certified by The National Sanitation Foundation (NSF) International - Standard 61. When properly applied, it shall produce a smooth finished lining with a minimum of 40 mils dry film thickness (DFT) after 16 hours cure time. The epoxy lining shall be approved for use in potable water mains 1-inch and larger in diameter. The epoxy lining shall be a two component, solvent free, moisture tolerant, VOC, and benzyl alcohol free system.

The epoxy lining system shall be packaged in clearly distinguishable colors, which when uniformly mixed, give a distinctive third color to provide a visual check of proper mixing. The epoxy lining system shall be supplied in clearly marked containers. Each container shall be marked with a batch number, date of manufacture, shelf life information, mix ratio and instructions for storage

and safe handling.

The epoxy lining system shall be GEOPOX GX014 as manufactured by the Mercol Products LTD, Copon Hycote 162PWX by E. Wood Ltd., Hunting Waterline Epoxy 8100 by Hunting Industrial Coatings, or an approved equal.

All manufacturers of epoxy lining must be ISO 9001 or 9002 certified for the design, production, installation and service of epoxy lining for a potable water distribution system, and will be required to furnish evidence of such certification.

EQUIPMENT

The lining equipment shall be certified by the epoxy manufacturer and shall be manufactured in accordance with the latest revision of the WRc Manual – In Situ Epoxy Resin Lining - Operational Requirements and Code of Practice. The equipment shall be suitable for storing, heating, mixing and applying the epoxy material in accordance with the epoxy manufacturer's requirements. All key components on the lining application equipment shall be calibrated in accordance with the equipment manufacturer's instructions and requirements.

Each lining rig shall have facilities to store the epoxy resin and hardener separately and to heat both according to the manufacturer's instructions. The lining rig shall provide devices to re-circulate the components in the reservoirs and through the lining hoses prior to lining.

The lining rig shall use suitable positive displacement pumps capable of dispensing the two components separately at the correct mix ratio. The rig shall be fitted with facilities for monitoring and recording the flow rates of both materials and the mix ratio, and provide a hard copy printout of this information. The output of the pumps shall be linked to the winch speed control to ensure that the correct thickness of lining is applied to each pipe diameter.

INSTALLATION

GENERAL

All work under this Contract shall be performed by skilled workmen experienced in similar installations, with the best current accepted practices of the building trades, and to all applicable codes.

The Contractor shall carry out their operations in strict accordance with all applicable OSHA, local and state safety standards. Though the installation process may be licensed or proprietary in nature, the Contractor shall not change any material, thickness, design values or procedural matters stated in the submittals, without the prior knowledge and written approval of the Public Works Commission. The Contractor shall submit, in writing, full details about component materials, their properties and installation procedures and abide by them fully during the entire course of work.

PIPE CLEANING

The Contractor shall clean the water mains by either the drag scrape or power bore method. The cleaning device shall be designed for the size of pipe to be cleaned. The Contractor shall furnish all the necessary tools, equipment, materials, back flow prevention devices and other appurtenances to readily complete this operation, including all dewatering of the water mains, which may not completely drain.

The Contractor shall ensure that rollers are fitted on the pipe to prevent possible damage to the pipe crown by the winch cables during drag cleaning operations.

Should drag scraping be utilized as the cleaning method, a foam swab shall be 'washed' through the cleaned pipe prior to drying and CCTV inspection. The foam swab shall be propelled through the entire length of the cleaned pipe with the use of water or compressed air.

The Contractor is required to dispose of any cleaning water and solid residue resulting from the cleaning operations in accordance with the applicable regulations and ordinances. The Contractor shall be responsible for obtaining the required approvals and permits for the disposal of the waste materials. Cleaning water shall not be discharged into storm drains, the sanitary sewer system, or onto the ground surface. The Contractor shall minimize to the view of the public, the materials removed in the cleaning operations including the flushing water.

The inside of the pipe and fittings shall be thoroughly cleaned and flushed of all material to as smooth and clean a surface as possible. All cleaned pipe and fittings shall meet the latest revision of AWWA Standard C602. Any sections of the pipe and fittings, which do not meet the above AWWA Standard, shall be re-cleaned.

The Contractor shall complete a CCTV inspection at the completion of the cleaning, prior to lining. The CCTV inspections shall be used by the Contractor to verify the degree of cleanliness of all pipe and fittings. The Contractor shall keep the Project Coordinator informed of when CCTV inspection is forthcoming so the Project Coordinator can be present. No epoxy lining shall be placed until the interior surface is inspected and found to be clean and dry. Any unknown fittings discovered during the television inspection shall be removed prior to lining the pipe and will be paid for with the "Remove Obstruction in Existing Pipe" Pay Item. The Contractor shall provide the video and output report to the Public Works Commission monthly with pay estimate. The video format and storage media shall be as approved by the Public Works Commission.

No payment will be made until all videos have been submitted and reviewed by the Public Works Commission.

Any section of the water main, such as near gate valves, short radius bends, ends of sections, and other areas that are inaccessible for machine cleaning shall be cleaned by hand. The degree of cleanliness for handwork shall be the same or better than results obtained from machine work. Rust, tubercles, deposits, old bituminous lining, etc., shall be completely removed by machine or hand in order to expose a clean surface for correct lining operations.

PIPE LINING

The Lining Supervisor and Lining Rig Operator shall be fully trained in the operation and understanding of the entire Epoxy Resin Lining application process, and shall be certified by an

Approved Certifying Body.

The Contractor shall conduct pre-lining checks on the lining equipment and epoxy in accordance with the manufacturer's recommendations. Included shall be verification of pump output, mix ratio, and material temperatures. This information and all pertinent site information shall be recorded on a lining sheet form. **A separate Epoxy Record Lining form shall be completed for each separate lining run and turned over to the Public Works Commission upon completion of the lining.**

Prior to inserting the delivery hoses into the main, the epoxy components shall be pumped and re-circulated until the uniform operating temperature, specified by the epoxy manufacturer has been reached. The pumping is then discontinued, the hoses immediately pulled through the pipe, and the lining operation begun without delay.

Once the hoses are inserted, the approved static mixer and application head are connected and checked for proper operations. The correct mixing of the two-epoxy components shall be visually checked by test spraying the mixed epoxy into a container outside the pipeline and the observed epoxy color recorded on the lining record sheet.

Application of the epoxy lining may begin when the Lining Rig operator is satisfied that the material flows are established and the epoxy lining color is consistent. The minimum lining thickness of 40 mils (DFT) shall be achieved in a single application. Any lined pipes shown to have a thickness of less than 40 mils at any point on the Record Lining Sheet shall be re-lined. Epoxy lining shall not be placed when the pipe temperature is below 38 degrees Fahrenheit.

The Contractor shall dispose of all excess epoxy and cleaning agents in accordance with all applicable Local, State, and Federal rules and regulations.

CURING

Immediately after the epoxy lining has been applied, the ends of the main shall be capped in order to prevent contamination and/or water from entering the pipe. Cure time shall be in accordance with the epoxy manufacturer's specifications.

LINING FAULTS

The latest edition of the WRc Manual – In Situ Epoxy Lining - Operational Requirements and Code of Practice will govern regarding acceptable and unacceptable lining faults and suggested methods of correction. All repairs shall be reviewed and approved by the Public Works Commission, prior to the Contractor commencing the repairs.

RESTORATION

All backfill shall be in accordance with Specification Section 02222 – Excavation, Trenching, and Backfilling for Utility Systems, and the requirements outlined in these Contract Documents. All trenches and excavations shall be compacted in accordance with these Contract Documents.

Prior to backfilling lateral and access pits, the Contractor shall ensure that the new pipe and service laterals are properly supported and on the correct line and grade. Stone or other suitable material, as approved by the Public Works Commission, shall be utilized under the new pipe to provide support and prevent sagging after backfill and compaction.

All work areas and rights-of-way shall be cleaned up, properly graded and vegetated, free of debris, and left in condition satisfactory to the Public Works Commission.

LINING INSPECTION

The Contractor shall provide the PWC Project Coordinator the opportunity to visually inspect and measure the lining thickness of both ends of each lining run. The Contractor shall complete a post-installation CCTV inspection for the Public Works Commission to determine the acceptability of the installation. The CCTV inspection shall be completed prior to placing the main into service. The Contractor shall video and record the lined pipe after the curing time period using a CCTV color camera with self-contained lighting, and remote focus. Lighting for the camera shall be suitable to allow a clear picture for the entire periphery of the pipe. The speed of the camera through the main shall be at a rate that ensures the entire pipe bore can be properly inspected. The camera shall be a color pan and tilt and the picture quality and definition shall be to the satisfaction of the PWC Project Engineer.

Videos shall be standard digital video file format and shall become property of Public Works Commission upon completion of project. All videos shall be properly labeled on outside with the project name, contractor's name, date, street name and block numbers or addresses. The onscreen display shall show date cleaned and lined, date CCTV inspected, street, block numbers or addresses, pipe diameter and material, and shall show the distance traveled. The counter shall be set to zero at the beginning of each run. All required information shall be entered on the Epoxy Resign Lining sheet. A CCTV Inspection Record for each run shall be completed and submitted to the Public Works Commission.

The purpose of recording the television inspection is to supply a visual aid and audio record of the inspection that may be re-played by the Public Works Commission. Video recording playback shall be at the same speed that it was recorded. All video recordings shall be in color and shall be made in digital video file format.
Upon completion of the lining, the Contractor shall seal the ends of the lined main in order to eliminate water from entering the lined main. Any water that enters the lined main shall be removed prior to conducting the post-rehabilitation television inspection.

EQUIPMENT

The television camera used for the inspection shall be one specifically designed and constructed for such inspection. Lighting for the camera shall be suitable to allow a clear picture for the entire periphery of the pipe. The camera shall be operative in 100 percent humidity conditions. The camera, television monitor, and other components of the video system shall be capable of producing a minimum 500-line resolution video picture. Picture quality and definition shall be to the satisfaction of the Public Works Commission, and if unsatisfactory, inspection shall be performed again with the appropriate changes made as designated by the Public Works Commission, at no additional cost. The television inspection equipment shall have an accurate footage counter that shall display on the monitor, the exact distance of the camera from the centerline of the starting access pit.

PROCEDURE

The camera shall be moved through the line in either direction at a uniform rate, stopping when necessary to ensure proper documentation of the water main's condition, but in no case will the

television camera be pulled at a speed greater than 30 feet per minute. Manual winches, power winches, TV cable, and powered rewinds or other devices that do not obstruct the camera view or interfere with proper documentation of the conditions shall be used to move the camera through the water main. If during the inspection operation, the television camera will not pass through the entire water main section, the equipment shall be removed and repositioned in a manner so that the inspection can be performed from the opposite access pit. All set-up costs for the inspection shall be included in the unit prices bid. If, again, the camera fails to pass through the entire section, the Contractor shall remove any obstructions or re-clean the main. Re-cleaning shall be done at no additional cost to the Public Works Commission.

Whenever non-remote powered and controlled winches are used to pull the television camera through the line, telephones, radios, or other suitable means of communication shall be set up between the two access pits of the water main being inspected to ensure that good communications exist between members of the crew.

The camera height shall be adjusted such that the camera lens is always centered (at one-half the ID) in the pipe being inspected.

RECORD OF VIDEO AND LOGS

Prior to returning any main to service, the Contractor shall allow the Project Coordinator sufficient opportunity to examine the relevant documentation of all lining runs, to ensure compliance with the Operational Requirements and Code of Practice Manual. The Contractor and Project Coordinator shall sign off on all approved documentation. Copies of all documentation shall be submitted on a monthly basis as part of the Contractor's pay request. Pay requests will not be processed until all documentation for the area being billed is submitted.

The following completed sheets shall be provided for every lining run:

- Epoxy Resin Lining Record, to include a copy of the rig printout and dip cards.
- CCTV Inspection Record, to include video recordings

The following sheets shall be provided when circumstances dictate:

- Non-Conformance Record – to report any defects experienced during lining
- Pipe Sample Quality Record – for each pipe sample exhumed
- Spin-Up Determination Record

A copy of each record sheet is located in the Appendix of these Contract Documents. The Contractor shall copy and use these sheets for submittals. No variation of these record sheets shall be utilized, unless specifically approved in writing by the Public Works Commission.

A. Television Inspection Logs

Printed location records shall be kept which shall clearly show the location, in relation to adjacent access pits, of service connections, tees, hydrant branches, and other items of significance. Additionally, unusual conditions, offset joints, cracked or collapsed sections, water main sections that the camera failed to pass through and reasons for the failure and other discernible features shall be recorded and a copy of such records shall be furnished to the Public Works Commission.

B. Video Recordings

The purpose of recording the inspection is to supply a visual aid and audio record of problem areas of the lines that may be re-played by the Public Works Commission. Video recording playback shall be at the same speed that it was recorded. All video recordings shall be in color. Initial pre and post video recordings shall be supplied in a standard digital video file format (i.e., mp4, mpg, or AVI) and supplied on standard portable digital media (i.e., USB flash drive, USB hard disk drive, DVD) as approved the Public Works Commission.

The Contractor shall furnish the video and logs of the pre and post video inspections to the Public Works Commission at each of the progress meetings. The Contractor shall pre-screen the videos and note any areas of concern, including, but not limited to: potential point repairs, offset joints, and obstructions that may pose problems with the lining process. The Contractor shall provide the Public Works Commission with a minimum of two weeks' notice for any potential repairs that are necessary to proceed with the work.

At the completion of each task order, the Contractor shall provide the Public Works Commission with digital videos and logs containing the pre and post tapes for all work completed during that task order. Each digital media device shall be labeled as to its contents. Labels shall include the disc number, date televised, water main segment reach designation, and street location on the disc. The digital media device shall be provided to the Public Works Commission within 30 days of completing the work authorized in the task order.

TESTING

All testing shall be in accordance with the applicable Specification Section governing water and/or sewer. All testing shall be satisfactorily completed prior to placing the system into service. All mains and laterals, to include fire hydrants, shall be tested.

Unless otherwise required by the Public Works Commission, lined water mains are not required to be hydrostatically tested. All lined water mains shall be chlorinated and disinfected, in accordance with PWC requirements.

ACCEPTANCE

Acceptance of the installed mains and laterals shall be based on conformance with the requirements herein, the Public Works Commission's review of all required construction submittals (as-builts, logs, CCTV inspection, etc.) and results of all testing.

*** END OF SECTION ***

DIVISION 2
SITE WORK
02831 - CHAIN LINK FENCING

GENERAL

Where shown on the plans there shall be installed a "chain link" fence with all necessary posts, braces, top rail, gates, fabric, extension arms, and three strand barbed wire.

The erected fence shall meet the following requirements:

> The enclosing fence shall have an overall fabric height of six feet (6') and an additional one foot (1') of three strand barbed wire, for a total height of seven (7'). The gates shall be seven feet (7') in overall height.

MATERIALS

Fabric: Fencing shall be chain link #9 gauge aluminized continuously woven wire 2" uniform square mesh without knots or ties, except for knuckling and barbing. Both the top and bottom edges of the fabric shall be barbed unless otherwise shown on the plans. The Contractor shall not piece together a number of short pieces of fence fabric.

Tensile Strength Test: Wire pickets of which this fabric is made to stand a tensile strength test of approximately 70,000 pounds per square inch based on the cross sectional area of the galvanized wire.

Framework: All posts and other appurtenances used in construction shall be hot-dipped, galvanized with a minimum of 1.8 oz. per square foot surface.

Line Posts: Hot dip galvanized "H" column (2" x 2 1/4") weight 4.1 pounds per linear foot, minimum carbon content 0.355. No used or open seam material will be permitted in posts or rails. (Alternate 2 1/2" O.D. galvanized pipe weight 3.65 pounds per linear foot or C-section line posts of the same dimension as H-post, 0.120 in wall thickness and fabricated from steel conforming to ASTM A-570, Grade E.) Intermediate posts shall be evenly spaced no more than 10 feet apart on center.

Top Rail: Hot dip galvanized pipe 1 5/8" O.D., weight 2.27 pounds per linear foot protected with outside sleeve type couplings at least 7 inches long. No used or open seam material will be permitted.

Terminal Posts: End, corner and pull posts hot dip galvanized pipe 3" O.D. - 5.79 pounds per linear foot. Gate posts hot dip galvanized pipe of "H" construction as specified.
Tension Wire: A bottom tension wire 7 gauge, alzd. (0.4 oz./s.f.), 6 inches above grade. Wire shall be fastened to fabric with aluminum rings at 24" on center and to each intermediate post.

Extension Arms: Hot dip galvanized. Line post arms of pressed steel malleable base; end, and corner post arms of malleable iron; gate posts to have ornamental top. Each extension arm to carry three strands of barbed wire approximately 12 inches out from fence line. Barbed wires to be securely fastened in by means of self-locking grooves. The barbed wire shall support a

minimum of 400 lbs. vertical dead load from tip of arm. The barbed wire shall be 4-point pattern composed of two strands of No. 12 1/2 gauge galvanized wire.

Gates: Frame to be galvanized pipe 2.0 inches O.D. weighing 2.27 pounds per foot. Each frame to be equipped with 3/8-inch diameter adjustable truss rods. Gateposts and corner posts shall be 3 inches O.D. weighing 5.11 pounds per foot. Gates are to be manufactured using 2" aluminum tubing in lieu of the specified Schedule 40 steel pipe. Gateposts and corner posts shall be 6 5/8" O.D. for swing gates (greater than 20 feet in length and 4" O.D. for slide gates, weighing minimum of 5.11 pounds per foot. Corner fittings to be heavy pressed steel or malleable castings. Fabric to be same as in fence. Gates to be completed with malleable ball and socket hinges, catch, stops and rest. Hinges to permit gate to swing back against fence, 180 degrees if required. Latches shall be arranged for padlocking so that the padlock will be accessible from both sides of the gate regardless of the latching arrangement.

Braces: Brace material to be hot dip galvanized and same as top rail, to be spaced midway between top rail and ground, and to extend from terminal post to first adjacent line post. Braces to be securely fastened to post by suitable connections, and then trussed from line post back to terminal post with 3/8 inch round rod equipped with a turnbuckle for adjusting.

Fittings: Hot dip galvanized. All fittings to be malleable, cast iron or pressed steel.

Fabric-Bands: Fabric to be fastened to line post with (9 gauge) fabric bands spaced approximately 18 inches apart, and to top rail with wires (9 gauge) spaces approximately 24 inches apart.

Locks: Locks will be provided by the Owner.

INSTALLATION

General: Installation shall be made in a workmanlike manner by skilled workers experienced in the erection of this type of fence and in accordance with the manufacturer's recommendations. The fence shall be erected on a previously prepared surface to the lines and grades indicated on the plans.

Post Setting: All posts shall be set plumb and in alignment into a 36-inch concrete footing of proper size and shape so as to furnish sufficient support to withstand any strain or shock ordinarily brought to bear on a fence of this character. The concrete strength shall be 3000 psi (ASTM C-94) and the foundations a minimum of 9 inches in diameter for line post and 12 inches for terminal post.
Concrete shall be thoroughly compacted so as to be free of voids and finished in a dome. Straight runs shall not exceed 500 feet between brace posts. Concrete shall cure a minimum of 72 hours before any further work is done on the posts.

Fabric: The fabric and barbed wire shall be stretched to the proper tension as recommended by the manufacturer and securely fastened to the framework members to result in a straight fence line without sagging. The bottom of the fabric shall be held as uniformly as is practicable to the finished grade.

END OF SECTION

DIVISION 2
SITE WORK
02931 - SOD

GENERAL

Restoration of existing lawn areas outside of the public right-of-way disturbed by construction activities shall be by installation of new sod. Restoration and sod shall be performed as soon as practical, but the time period between initial disturbance, the utility installation and sod placement shall not exceed 60 days. Sod is defined as blocks, squares, strips of turf grass and adhering soil used for vegetative planting. Sodding and preparation of the sod bed shall be performed by an experienced landscape subcontractor specializing in this type of operation unless otherwise approved by the Public Works Commission in writing.

The Contractor shall adhere to the standards set forth by the American Association of Nurseryman and the Associated Landscape Contractors of America. All personnel shall be appropriately trained with regard to the degree of involvement so to assure the Owner the highest level of workmanship. Sod species suitable in this area are hybrid bermuda, centipede and zoysia; however the sod placed for each individual's lawn shall be the same species of sod as existing. Sodding may be performed at any time of the year except frozen sod shall not be placed nor shall sod be placed on frozen ground. The Contractor shall adapt his operations to variations in weather or soil conditions as necessary for the successful establishment and growth of a vigorous, disease free and weed free sod lawn.

MATERIAL

Materials, equipment and products incorporated in the work shall be approved by the Public Works Commission. The Contractor shall submit a list of the proposed materials with samples, if required. Package materials should be delivered in unopened original containers showing weight, analysis and name of manufacturer. The Contractor shall protect the material from deterioration and/or damage

Sod shall contain 95 percent permanent grass; not more than five (5) percent weeds and undesirable grasses, good texture and free from obnoxious grasses, roots, stones and foreign materials. Sod shall be uniformly 1 ½ to 2 inches thick with a well developed fibrous root mat system in topsoil with clean cut edges. The sod shall be sufficiently dense and cut to the minimum required thickness such that if the sod is suspended by one corner, the sod will not tear apart. The sod shall be recently mowed to a height of not more than three (3) inches prior to harvest. The sod shall be supplied and maintained in a healthy condition as evidence by the grass being a normal green color in appearance, dense, and free from insects, pests, disease or injury. Sod shall be delivered to the job site within 24 hours after being cut and shall be installed within 24 hours after delivery. Any sod which is torn, broken or too dry will be rejected.

SOIL BED PREPARATION

Before landscape construction is to begin, the site shall be cleaned and disposed of brush, rubbish, stones, gravel and other foreign material within the area to be landscaped. Exposed ground surfaces disturbed during construction activities shall be graded to the original contours (allowing for the thickness of the sod) or as in the case of an altered contour such as a fill slope,

graded as directed by the Public Works Commission to finish grade, or typical cross section. The sod bed shall be excavated to such a depth that after sod placement the top of the sod shall be flush with surrounding grade or contours. Rake areas to be sodded smooth, free from unsightly variations, bumps, ridges or depressions. Do not start work until conditions are satisfactory and do not work during inclement or impending inclement weather.

The surface area to receive sod shall contain a minimum of four (4) inches of good, fertile, friable, organic natural topsoil loam as a base for laying the sod. Topsoil shall be free of clumps, brush, sticks, weeds, stones, roots, trash or other objectionable material. Contractor shall insure all topsoil to be free of plants or plant parts of quackgrass, johnson grass, nut sedge, poison ivy or other noxious weeds. The Contractor shall furnish and supplement the existing topsoil at no additional costs to the Public Works Commission providing a minimum four (4) inch thickness as specified. Soil preparation shall not be performed in frozen or extremely wet conditions. The finished topsoil bed shall be uniform in grade, with a yard like appearance. All changes in grade shall have a smooth, rounded peaks and valleys.

The soil shall be scarified or otherwise loosened to a depth of not less than five (5) inches and all clods shall be broken. The top four (4) inches shall be worked into an acceptable smooth, friable and uniformly fine texture sod bed by use of soil pulverizes, drags, harrows or by other methods approved by the Public Works Commission. Commercial grade fertilizer (8% nitrogen, 8% phosphate, 8% potash) shall be applied at a rate of 20 pounds per 100 square feet, super-phosphate at 12 pounds per 1,000 square feet and lime (dolomite limestone containing not less than 85% total carbamates) shall be applied at a rate of 25 pounds per 1,000 square feet or at a rate recommended for the type of sod being placed. Apply soil amendments within 24 hours after raking topsoil base surface and not more than 48 hours prior to laying sod. Mix thoroughly a minimum depth into the upper four (4) inches of topsoil and lightly water to aid in dissipation. Sod placement shall not begin until the soil preparation is inspected and approved by the Public Works Commission. During application of soil amendment fertilizer etc., adequate precautions shall be taken to prevent damage to existing features such as traffic, structures, landscape, trees, vegetation, utilities or any other appurtenances. The Contractor shall be required to repair or clean any damages.

PLACING SOD

The Contractor and his landscape subcontractor shall coordinate the placing of the sod to begin within 24 hours after the topsoil base preparation is completed and accepted by the Public Works Commission. Sod shall be brought to the site as near to the time of placing as possible. Store sod in the shade, and keep watered particularly in extreme hot and dry condition to insure vitality and to prevent the dropping off of soil during handling. During wet weather, the sod shall be allowed to dry sufficiently to prevent tearing. Handling shall be done in a manner which will prevent tearing, breaking, drying or other damage. Carefully place sod in rows with the longer side perpendicular to slopes and the ends staggered in each successive row in a brick-like pattern. Butt the ends and sides together tightly and do not overlap or stretch the sod. Do not leave any voids or gaps. Unavoidable gaps shall be closed with small pieces of torn or broken sod if kept moist and approved by the Public Works Commission. After the sod is laid, irrigate thoroughly to allow water to penetrate a minimum six (6) inches into the soil below the sod. Sod shall not be placed when the atmospheric temperature is below 32oF.

Tamp and roll completed sod installation with a manual roller or approved equipment to eliminate

minor irregularities and to form close contact with the soil bed immediately after placing and watering. The type of rolling and tamping equipment to be used shall be submitted to the Public Works Commission for approval prior to construction. On steep slopes 3:1 (horizontal and vertical) or greater, in drainage ditches or any areas where sod slipping may occur, anchor sod with approved wooden stakes (½"x ¾" x 12") or staples spaced not over two (2) feet apart in any direction and/or in sufficient number to prevent slippage or displacement. The anchors shall be driven flush with the surface of the sod. The wide flat side of the stake shall be driven parallel to the slope. Staking shall be done concurrently with sod placement and prior to tamping. Sod shall be laid with the long horizontal edge of the strips parallel to the contour starting at the bottom of the slope. The edge of the sod shall be turned slightly in the ground at the top of a slope and a layer of earth placed over it and compacted so as to conduct the surface water over and onto the top of the sod. Upon completion of the above described work, the surface of the sodded areas shall coincide with the finished grade and not exceed ¼" plus or minus variation to adjoining grade or proposed contour. Extreme care shall be taken to prevent the installed sod from being torn or displaced.

MAINTENANCE

The Contractor shall, at no additional cost to the Public Works Commission, make whatever arrangements necessary to supply water of suitable quality and purity to sustain and encourage vigorous plant growth, and supply all equipment for proper delivery and application to planted areas. Water obtained from a PWC fire hydrant shall be metered and properly protected with an approved backflow prevention device. PWC must inspect and approved any connections to their water system to include the proposed water application and storage equipment. The Contractor shall not use private resident's water. The Contractor is solely responsible to provide watering of the sod. The method of application of water shall be approved by the Public Works Commission. Limit watering to early morning or late afternoon to enable to soil the absorb maximum amount of water.

Maintenance shall begin immediately after sodding operation. The Contractor shall maintain all sodded areas until sod is firmly established and as outlined below. Maintenance will include watering, fertilizer, pest control, soil amendments, disease control, erosion repair, mowing, protecting turf area from traffic (i.e. temporary fences, barriers, signs, etc.) and replacement of any dead or damaged sod.

Watering

- Water lawn areas once a day with a minimum ½ inch water for the first three (3) weeks after area sodded.
- After the three (3) week period, water twice a week with a ¾ inch of water each time unless a comparable amount of rainfall has occurred.
- Make weekly inspections to determine moisture content of soil and supplement the above watering schedule as needed.
- Excessive runoff puddling and wilting shall be prevented.

Fertilizer and Pest Control

- Evenly spread fertilizer composite at a rate of 40 pounds per 5,000 square feet or as recommended by the manufacturer. Fertilizer shall not be applied until two (2) weeks after initial placement of the sod or prior to the advent of winter dormancy.

- Treat areas of weed and insect infestation as recommended by the treatment manufacturer.

Mowing

- The Contractor shall do mowing operations, (in yards not being mowed by residents) until provisional acceptance.
- Mowing shall be done only when the grass is dry with a rotary type mower having a blade height set not lower than one and one half (1½) inches nor higher than three (3) inches.
- Mowing operations shall be conducted at intervals, which ensure grass height does not exceed four (4) inches between mowing.
- The Contractor shall complete at least one mowing operation before the work will be considered for acceptance.

The Contractor shall protect and not allow access of vehicular traffic into any newly sodded areas and shall repair any damaged turf to original grade. Maintenance shall continue for a period of 90 days after placement or until provisional acceptance by the Public Works Commission. A written record shall be furnished to the Owner of the maintenance work performed. At least two weeks shall elapse after chemical control is applied before a request of inspection.

ACCEPTANCE

Fifteen (15) days prior to the end of the 90 day maintenance period, the Contractor shall make a written request to the Public Works Commission for an inspection and provisional acceptance of the sod. Failure to notify the Public Works Commission will not relieve the Contractor of the maintenance provisions required and the Contractor will continue to be responsible for the maintenance of the sod.

Replacement of dead sod shall be performed within seven (7) days after notification by the Public Works Commission and the maintenance period for these areas or individual lawns shall be extended for the 90 day maintenance period. Failure to replace dead sod within the specified seven (7) day period will result in the Public Works Commission having the work performed and deducting the cost from the Contract; however, the Contractor shall be responsible for the maintenance.

Final acceptance will be given upon satisfactory contract performance exhibited at final inspection and acceptance. Sodded areas are to be fully rooted prior to acceptance. The Owner shall be the sole judge as to whether or not the lawns are acceptable. Should any deficiencies be disclosed at final inspection, the Contractor shall make the necessary corrections in a timely manner and request re-inspection.

GUARANTEE

The Contractor shall guarantee a dense, vigorous stand of turf free of weeds, disease, pests or any dead areas more than one half of a square foot in size for a period of 90 days from initial placement or replacement whichever is greater. Total dead area shall not exceed one percent (1%) of total square footage for each individual resident's lawn.

END OF SECTION

DIVISION 2
SITE WORK
02933 - LAWNS AND GRASSES (SEEDING)

GENERAL

All exposed ground surfaces that have been disturbed during construction shall be graded to original contours as practicable, shaped to drain, and free of trash and debris. Grassing shall be accomplished as soon as practicable after sections of work are completed. Seeding and/or planting shall be performed by an experienced subcontractor specializing in this type of operation, unless otherwise approved by the Public Works Commission in writing. Disturbed sections shall not exceed one mile, without prior approval by the Public Works Commission. Grassing shall be in accordance with the Contract Documents.

PREPARATION OF THE SOIL

The surface area to receive seed shall contain a minimum of four (4) inches of good, fertile, friable, organic natural topsoil loam as a base for spreading the seed. Topsoil shall be free of clumps, brush, sticks, weeds, stones, roots, trash or other objectionable material. Contractor shall insure all topsoil to be free of plants or plant parts of quackgrass, johnson grass, nut sedge, poison ivy or other noxious weeds. The Contractor shall furnish and supplement the existing topsoil at no additional costs to the Public Works Commission providing a minimum 4 inch thickness as specified. Soil preparation shall not be performed in frozen or extremely wet conditions. The finished topsoil bed shall be uniform in grade, with a yard like appearance. All changes in grade shall have a smooth, rounded peaks and valleys.

The topsoil shall be loosened and mixed to the depth of four inches (4"). Suitable equipment (cultipackers, harrows, drags) meeting the approval of the Public Works Commission shall be used. This operation shall be accomplished by cutting on one (1) foot centers parallel to the contour of the slopes. On slopes that are steeper than 2:1, both depth preparation and degree of smoothness may be reduced, if approved by the Public Works Commission, but in all cases the slope surface shall be scarified groove, trenched or punctured so as to provide a textural plane of cut forming pockets, ridges, or trenches in which seeding material can lodge. Soil preparation shall not be performed when the soil is frozen, extremely wet or in an otherwise unfavorable working condition. The soil shall be free of any substance that might inhibit plant growth. Assistance of the local agricultural agent is recommended.

Lime shall be applied at the rate of 1/2 tons per acre. 10-20-20 commercial fertilizer shall be applied at the rate of 1,000 pounds per acre and well worked in to the top four inches (4”) of top soil. If hydroseeding, use 500 pounds of 10-10-10 fertilizer on slopes steeper than 1/2 horizontal to 1 vertical.

SEED MIXTURE AND SOWING THE SEED

Seed shall be seed certified to be the latest season's crop and shall be delivered in original sealed packages bearing the producer's guaranteed analysis for percentages of mixtures and pure live seed. The producer's seed label shall indicate it the minimum percent of pure live seed (which shall be 82.45 for Bermuda, 88 for Rye Grain), the minimum percent of germination in hard seed

and maximum percent of weed seed (no more than 1 percent for Bermuda, 0.5 percent for Rye Grain). Seed shall be labeled in conformance with U.S. Department of Agriculture rules and regulations under the Federal Seed Act and applicable State seed laws. Seed that has become wet, moldy, or otherwise damaged will not be acceptable.

The following seed mixture shall be used:

POUNDS OF SEED PER ACRE

	K-31 Fescue	Rye	Grain Centipede	Common Bermuda
April 15 - Sept. 1	75		60 (hulled)	5
Aug. 15 - Nov. 15	120		25 (hulled)	5
Nov. 1 - April 1	120	120	25 (un-hulled)	5

Note: If there are differences in the seed mixture between the mixture stated in these specifications and that which is specified as part of an approved Erosion Control Plan, the seed mixture specified in the erosion control plan shall take precedence.

Where construction crosses a pasture that has been grassed, the Contractor shall re-seed the area with the same type of grass as found on the site. All highway rights-of-way, and private yards disturbed shall also be re-seeded or with the same type of grass previously found. The seed mixture specification shall be used as a guide and the Contractor is charged with the responsibility of seeding areas with the proper type of grass that matches the existing.

Seed shall be broadcast uniformly by hand or by approved sowing equipment. One half of the seed shall be sown in one direction and the remaining shall be sown at right angles to the first. Do not seed when the wind velocity exceeds five (5) miles per hour. Rake lightly into top 1/8 inch of the soil prior to compacting, with a roller not exceeding 100 pounds.

All seeded areas will be mulched with two (2) tons per acre of small grain straw or wood cellulose fiber spread uniformly, approximately 1/4 of ground should be visible to avoid smothering seedlings. Asphalt emulsion (ASTM D-977 and ASTM D-2028) shall be used to anchor the straw applied at 150 gallons per ton of straw, or crimped to stabilize. Asphalt emulsion shall be required from November 1st to March 31st. The Contractor shall take sufficient precautions to prevent mulch from entering drainage structures through displacement by wind, water or other causes and promptly remove any blockage which may occur.

SPECIAL CONSIDERATIONS

Shrubbery shall be expertly removed and carefully preserved for replanting, unless otherwise directed by the Public Works Commission adequate earth ball shall be removed to guard against damage to the root system. Shrubbery shall be replanted only after all construction is complete. The excavation made for replanting shall be six inches (6”) larger in every dimension than the root ball removed. This additional space shall be filled with a mixture of one half topsoil and one half peat moss. Care shall be taken to set the top of the ball slightly above or flush with the surrounding

ball removed. This additional space shall be filled with a mixture of one half topsoil and one half peat moss. Care shall be taken to set the top of the ball slightly above or flush with the surrounding surface. Any shrubbery damaged or that dies shall be replaced with an equal or better plant material at the Contractor's expense.

MAINTENANCE

The Contractor shall protect and maintain grassed areas as necessary to establish a uniform turf composed of the grasses specified. The Contractor shall re-seed any bare areas and repair all eroded areas.

Watering of seeded areas will be required during periods of dry weather to promote maximum growth. The Contractor shall supplement natural rainfall to insure a minimum of one (1) inch of rainfall weekly.

Maintenance of lawns begins immediately after the area is planted and continues for the period required to establish acceptable lawns, but not less than sixty (60) days after initial seeding, or until provisional acceptance by Owner. Maintain seeded areas by watering, fertilizing, mowing, weeding and other operations such as rolling, re-grading, replanting, aerating, and mulching as required to establish an acceptable lawn free of eroded or bare areas.

ACCEPTANCE

Fifteen (15) days prior to the end of the sixty (60) day maintenance period, the Contractor shall make a written request to the Owner for an inspection and provisional acceptance of the seeded area. Failure to notify the Owner will not relieve the Contractor of the maintenance provisions required and the Contractor will continue to be responsible for the maintenance of the seeded area.

Replacement of dead seed area(s) shall be performed within seven (7) days after notification by the Public Works Commission and the maintenance period for these areas or individual lawns shall be extended for an additional sixty (60) day maintenance period. Failure to replace seeded area(s) within the specified seven (7) day period will result in the Owner having the work performed and deducting the cost from the Contract; however, the Contractor shall be responsible for the maintenance.

Final acceptance will be given upon satisfactory contract performance exhibited at final inspection and acceptance. Seeded areas are to be fully rooted prior to acceptance. The Owner shall be the sole judge as to whether or not the lawns are acceptable. Should any deficiencies be disclosed at final inspection, the Contractor shall make the necessary corrections in a timely manner and request re-inspection.

Payment to the Contractor for seeding areas will be approved once the seed has been established and meets the requirements of this paragraph of this specification.

GUARANTEE

The Contractor shall guarantee a stand of turf is considered acceptable when a live vigorous stand of permanent grass is established with growing sprouts visible at the surface showing not

less than 9 seedlings of permanent grass at least 2 inches long in each square foot, and where no gaps larger than 4 inches in diameter occur anywhere in the lawn area. Permanent grass is defined as Common Bermuda, Centipede, and Fescue.

END OF SECTION

DIVISION 2
SITE WORK
03301 - CONCRETE CONSTRUCTION (UTILITY)

GENERAL

Concrete construction specified in this section shall be applicable to all "site work" and is not intended to cover general building specifications. The concrete work shall include all furnishing, hauling, fine grading and subgrade, form work, etc. and all incidentals necessary for completion of the work as it pertains.

MATERIALS

Concrete

The Contractor shall furnish and place concrete in strict accordance with the requirements of ACI 318 (most recent edition). Ready-mixed concrete from an approved mixing plan shall be used throughout the work and conform to the requirements of ASTM C-94 for batch, mixing, and transporting. Concrete shall be in accordance with the following requirements:

A. Under Ground - Regular Weight Concrete

28-day compressive strength	3000 psi
Coarse aggregate	1 ½" max. size stone
Slump	2" minimum, 4" maximum
Air Entrainment	No requirement

B. Walls, Slabs, Sidewalks, Curb and Gutter - Regular Weight Concrete

28-day compressive strength	3000 psi
Coarse aggregate	3/4" max. size stone
Slump	2" minimum, 4" maximum
Air Entrainment	5 more or less 1

The Contractor shall submit for approval mix designs, designed and tested by an approved testing laboratory, following the requirements of ACI 318 for each class of concrete to be used on this project. Mix designs in excess of one year old shall be verified. The Contractor will be responsible for all costs involved in the mix design. Material suppliers and material proportions incorporated in the mix design and certification shall not change without written permission from the Public Works Commission.

Admixtures used to produce entrained or air shall be sulforated hydrocarbons or neutralized vinsol resins conforming to ASTM C-260. Calcium chloride, other accelerators, or "anti-freeze" shall not be used without written approval by the Public Works Commission.

Reinforcing Steel

Reinforcing bars shall be new billet stock and shall conform to ASTM A-615, Grade 60. Bars shall be deformed to conform to ASTM A-305. The Contractor shall check and submit for approval four (4) sets of shop and erection drawings prepared by the fabricator. Reinforcement detailing and placement shall conform to ACI 318. All reinforcing bars shall be tied in place according to

approved erection drawings, using bar supports and accessories conforming to ACI 315. Laps or splices shall conform to ACI 318, and consist of the following minimum dimensions:

Tension Splices	36 Bar Diameters
Compression Splices	30 Bar Diameters

All reinforcing bars shall be tagged and stored in such manner as to be readily available at the time needed. Tag mark substitutions will not be made.

Welded wire mesh fabric reinforcing shall conform to the requirements of ASTM A-185. Lap splices shall be at least one full mesh plus 2" staggered to avoid continuous laps in either direction and securely wired or clipped.

GRADING

The Contractor shall use every effort to observe any possible misalignments in line or grade of the installed forms and will call such to the attention of the Public Works Commission promptly. The Contractor is cautioned that he shall be responsible for any damage to utility lines caused by his negligence. The Public Works Commission or his representative shall then inspect the forms and if approved, pouring operations may begin. Where unstable material exists, the Contractor shall remove such material to a depth required to provide a stable subgrade at no additional cost to the Public Works Commission.

FORM WORK

Metal forms shall be used throughout the work except for short, odd length sections and in accordance with ACI 301 and ACI 347 (most recent editions). Earth cuts may be used as forms for unexposed vertical surfaces on footings, provided the soil and workmanship allow an accurate and curable excavation. Forms shall be kept in good condition at all times. Any forms which have become out of shape or otherwise unsuitable shall be removed from the work. Forms shall be of such section and design that they will adequately support the concrete and any construction equipment used in the work. Form sections shall be provided with interlocking joints to ensure that the forms are tightly jointed together free from movement. Forms shall be held in place by metal pins, not less than eighteen (18) inches in length, with fastenings of metal and wedges to insure a correct, rigid setting.

Forms shall be of the dimension required for the designed cross-section shown on the plans. Built up sections to attain the required depth will not be permitted. Forms shall be set true to the lines and grades established by the Design Engineer or as indicated on the plans.

Forms shall be held rigidly in position and shall be of sufficient strength to resist springing out of line when concrete is placed.

PLACING CONCRETE

Prior to placing concrete, the subgrade shall be moistened and the contact side of the forms shall be cleaned and coated with a heavy oil. The Contractor shall not place any concrete without the forms, reinforcing steel and subgrade being inspected and approved by the Design Engineer. Placing of concrete is to be in accordance with ACI 304 (most recent edition). Water shall be

removed from the excavation before placing concrete and water shall be diverted to prevent washing over freshly deposited concrete.

Concrete shall be placed as not to disturb concrete already in place and in such a manner as to require the minimum amount of lateral movement. Concrete shall be deposited in the forms without segregation. A tremie shall be used when the fall exceeds five (5) feet. Care shall be taken not to upset any forms during the concrete pouring operations. Any concrete showing misalignment due to form movement shall be removed and replaced at no additional cost to the Public Works Commission.

All concrete shall be consolidated in accordance with ACI 309 (most recent edition). Mechanical vibrators shall be operated by experienced workmen. Spading and rodding may be required to supplement mechanical vibration. Consolidation shall be adequate to remove any voids and after removal of the forms, no honeycomb shall be present. Should any honeycomb be present, the Design Engineer shall determine if the honeycomb is of a minor nature, the voids may be filled with mortar as approved by the Design Engineer.

All concrete within forms shall be brought to true section by the use of an approved straight edge and shall be tamped with straight edge to bring mortar to the surface, after which it shall be floated smooth by means of wood floats. No steel floats will be permitted. After true surface of section has been obtained, and after initial set has taken place, the entire surface shall be brushed with a dampened brush. All joints and all exposed edges shall be rounded off with approved jointing and edging tools. The type of finish required will be specified in the specific item of work specified or indicated on the drawings. All exposed surfaces of retaining walls, structures, etc. shall be given a Class 2 finish with ¼ inch chamfered edges.

No more concrete shall be laid than can be properly finished and covered during the daylight, unless adequate artificial light satisfactory to the Design Engineer is provided.

Immediately after finishing operations have been completed, the entire surface of the concrete shall be sprayed with an approved curing compound. The use of liquid retarding agents shall conform to standards specified by current AASHTO or ASTM Specifications.

Cold weather concreting shall be in accordance with ACI 306 (most recent edition) and hot weather concreting shall be in accordance with ACI 305 (most recent edition). Concreting shall be done when weather conditions are favorable unless otherwise directed by the Design Engineer. Concrete operations shall be discontinued when the temperature of 40 degrees Fahrenheit is reached on a falling thermometer. No concreting shall be attempted when local weather bureaus indicate temperatures below freezing within the ensuing 24 hours unless proper precautions are made to protect concrete by covering with straw or other thermal insulation satisfactory to the Design Engineer. The Contractor shall be responsible for the quality and strength of the concrete laid during cold weather or hot weather and any concrete damaged by frost action or freezing shall be removed and replaced as directed by the Design Engineer and/or the Public Works Commission at the Contractor's expense.

Forms shall not be removed from the concrete for a minimum of 7 days, unless approved by the Design Engineer. The Contractor shall apply a curing compound or provide measures to maintain moisture for proper curing at his expense, if early form removal is approved. Immediately after the forms have been removed, all honeycomb areas shall be repaired (with one-part cement and

two parts sand) and earth backfill material shall be placed adjacent to the finished concrete and smoothed off to prevent an accumulation of standing water, subgrade saturation or under wash in the event of rain.

Both pedestrian and vehicle traffic shall be excluded from crossing the concrete for a period of 14 days by the erection and maintenance of suitable barricades. Contractor shall be responsible for any damage resulting from traffic within the 14-day period and he shall remove and replace any concrete damaged as directed by the Design Engineer and/or Public Works Commission.

MASONRY MATERIALS

Brick shall be in accordance with ASTM C-32 Grade MS laid in full beds of mortar with shove joints.

Concrete masonry blocks shall be in accordance with ASTM C-139. Blocks shall be at least 5", but not more than 8" in thickness nor less than 8" in length and of such shape that the joints can be effectively sealed and bonded with cement mortar.

Cement mortar for brick work shall be in accordance with ASTM C-270, Type M. Use Type IIA cement in accordance with ASTM C-150.

TESTING

The requirements of ACI318 (most recent edition) shall be used to control the evaluation of all concrete strengths. The strength is to be checked during construction by four (4) cylinders at the option and cost of the Public Works Commission, of which 1 shall be broken at 7 days, 2 at 28 days. If the specified strength is not achieved in 28 days, 1 reserved shall be stored and broken as specified by the Design Engineer. Cylinders shall be made and stored in accordance with ASTM C-13. Cylinders shall be for each day concrete is poured in excess of 10 cubic yards of each different type of concrete, as determined by the Design Engineer. All additional expenses required because of the failure of the materials to meet routine testing requirements, or poorly scheduled concrete deliveries, shall be borne by the Contractor.

END OF SECTION

SECTION E – STANDARD DETAILED DRAWINGS

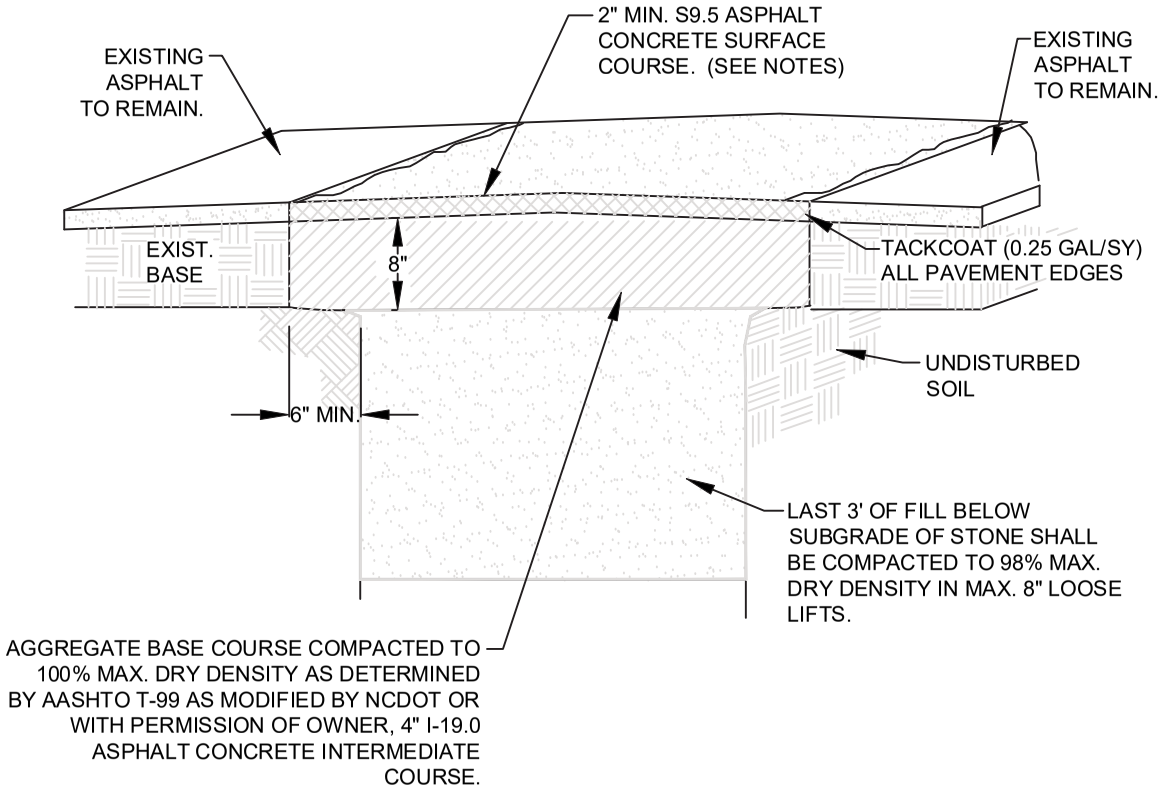

NOTES:

1. CONTRACTOR SHALL PATCH PAVEMENT TO THE SAME PAVEMENT PROFILE AS EXISTED PRIOR TO REMOVING PAVEMENT IN ACCORDANCE WITH THE REQUIREMENTS OF THIS DETAIL.
2. WHERE PATCH OF ASPHALT CURBING OCCURS CONTRACTOR SHALL MATCH EXISTING CURB GRADES WITHIN 0.02 FEET. PATCHES THAT ARE ABOVE THE CURB GRADE LINE WILL NOT BE ACCEPTABLE AND SHALL BE REMOVED AND REPLACED. CURB PATCH SHALL BE THE SAME SHAPE/TEMPLATE AS THE EXISTING CURB.
3. CONTRACTOR SHALL BE REQUIRED TO PROVIDE TRAFFIC CONTROL AND DEVICES AS REQUIRED BY THE M.U.T.C.D. OR NC SUPPLEMENT. WORK CANNOT PROCEED UNTIL THE MEASURES ARE IN PLACE. CONTRACTOR SHALL BE RESPONSIBLE TO PROTECT NEW PAVEMENT FROM TRAFFIC AND OTHER SOURCES OF DAMAGE UNTIL ASPHALT HAS SUFFICIENTLY COOLED TO PREVENT DAMAGE.
4. CONTRACTOR SHALL SAWCUT EXISTING PAVEMENT STRAIGHT AND TRUE IMMEDIATELY PRIOR TO PAVING. THE FINAL PRODUCT SHALL BE SUBJECT TO THE OWNERS APPROVAL.
5. PATCH PAVING ON NCDOT MAINTAINED ROADS SHALL BE IN ACCORDANCE WITH THE APPROVED NCDOT ENCROACHMENT. REFER TO FAYPWC STANDARD DETAIL M.19 FOR NCDOT PATCH PAVING REQUIREMENTS.
6. PROVIDE A MINIMUM OF 2" PAVEMENT (S9.5), IF THE EXISTING PAVEMENT IS 2" OR LESS. MATCH EXISTING PAVEMENT THICKNESS IF OVER 2".
7. FOR PATCHES UP TO 4" THICK, PLACE S9.5 IN 2 LIFTS.
8. FOR PATCHES OVER 4" THICK, PLACE BINDER (I-19.0) TO 2" BELOW SURFACE. INSTALL BINDER IN 2" (MAX.) LIFTS. THE FINAL 2" SHALL BE SURFACE (S9.5).
9. ALL PATCHES SHALL HAVE A MINIMUM OF 8" ABC UNDER ALL PAVEMENT, INCLUDING CURB AS REQUIRED.

PERMANENT PAVEMENT PATCH N.T.S.			FAYETTEVILLE PUBLIC WORKS COMMISSION FAYETTEVILLE, N.C.		NO.	DATE	REVISION
					1	01/07	CHANGED ASPHALT MIX
SHEET NO. 1 OF 1	DWG. NO. M.2	DWG. BY: FAYPWC	WATER RESOURCES ENGINEERING DEPARTMENT		2	08/10	REVISED, DELETED NOTES
	DATE: JAN. 01, 2025	APPROVED BY: K.A.H.					

M2-PER-PATCH.dwg

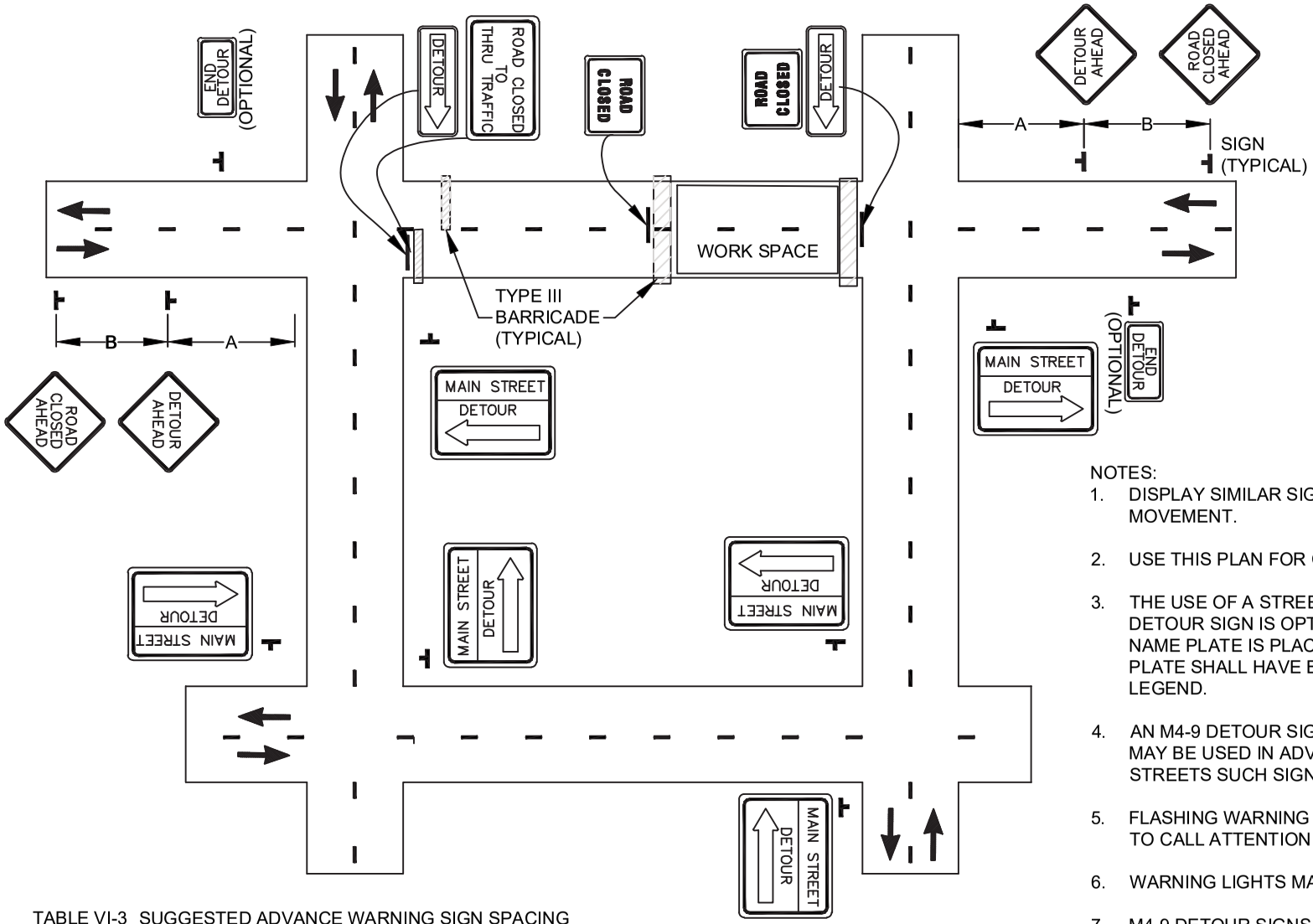

NOTES:

1. DISPLAY SIMILAR SIGNS AND DEVICES FOR THE OPPOSITE MOVEMENT.
2. USE THIS PLAN FOR CITY STREETS.
3. THE USE OF A STREET NAME SIGN MOUNTED WITH THE M4-9 DETOUR SIGN IS OPTIONAL. WHEN USED, THE STREET NAME PLATE IS PLACED ABOVE THE DETOUR SIGN. THE PLATE SHALL HAVE BLACK ON DIAMOND GRADE ORANGE LEGEND.
4. AN M4-9 DETOUR SIGN WITH AN ADVANCE TURN ARROW MAY BE USED IN ADVANCE OF A TURN. ON MULTILANE STREETS SUCH SIGNS SHALL BE USED.
5. FLASHING WARNING LIGHTS AND/OR FLAGS MAY BE USED TO CALL ATTENTION TO THE ADVANCED WARNING SIGNS.
6. WARNING LIGHTS MAY BE USED ON TYPE III BARRICADES.
7. M4-9 DETOUR SIGNS MAY BE LOCATED ON THE FAR SIDE OF THE INTERSECTIONS.
8. THIS STANDARD DERIVED FROM PART VI OF THE M.U.T.C.D., (STANDARDS AND GUIDES FOR STREET AND HIGHWAY CONSTRUCTION, MAINTENANCE, UTILITY, AND INCIDENT MANAGEMENT OPERATIONS) ISSUED APRIL 1995.

TABLE VI-3 SUGGESTED ADVANCE WARNING SIGN SPACING

ROAD TYPE	DISTANCE BETWEEN SIGNS		
	A	B	C
URBAN LOW-SPEED	200	200	200
URBAN HIGH SPEED	350	350	350
RURAL	500	500	500
EXPRESSWAY/FREEWAY	1,000	1,600	2,600

FIGURE TA-20
DETOUR FOR CLOSED STREET
N.T.S.

FAYETTEVILLE
PUBLIC WORKS COMMISSION
FAYETTEVILLE, N.C.

WATER RESOURCES
ENGINEERING DEPARTMENT

NO.	DATE	REVISION

SHEET NO. 1 OF 1

DWG. NO. M.7

DWG. BY: FAYPWC

DATE: JAN. 01, 2025

APPROVED BY: K.A.H.

M7-DETOUR-ROAD-CLOSED.dwg

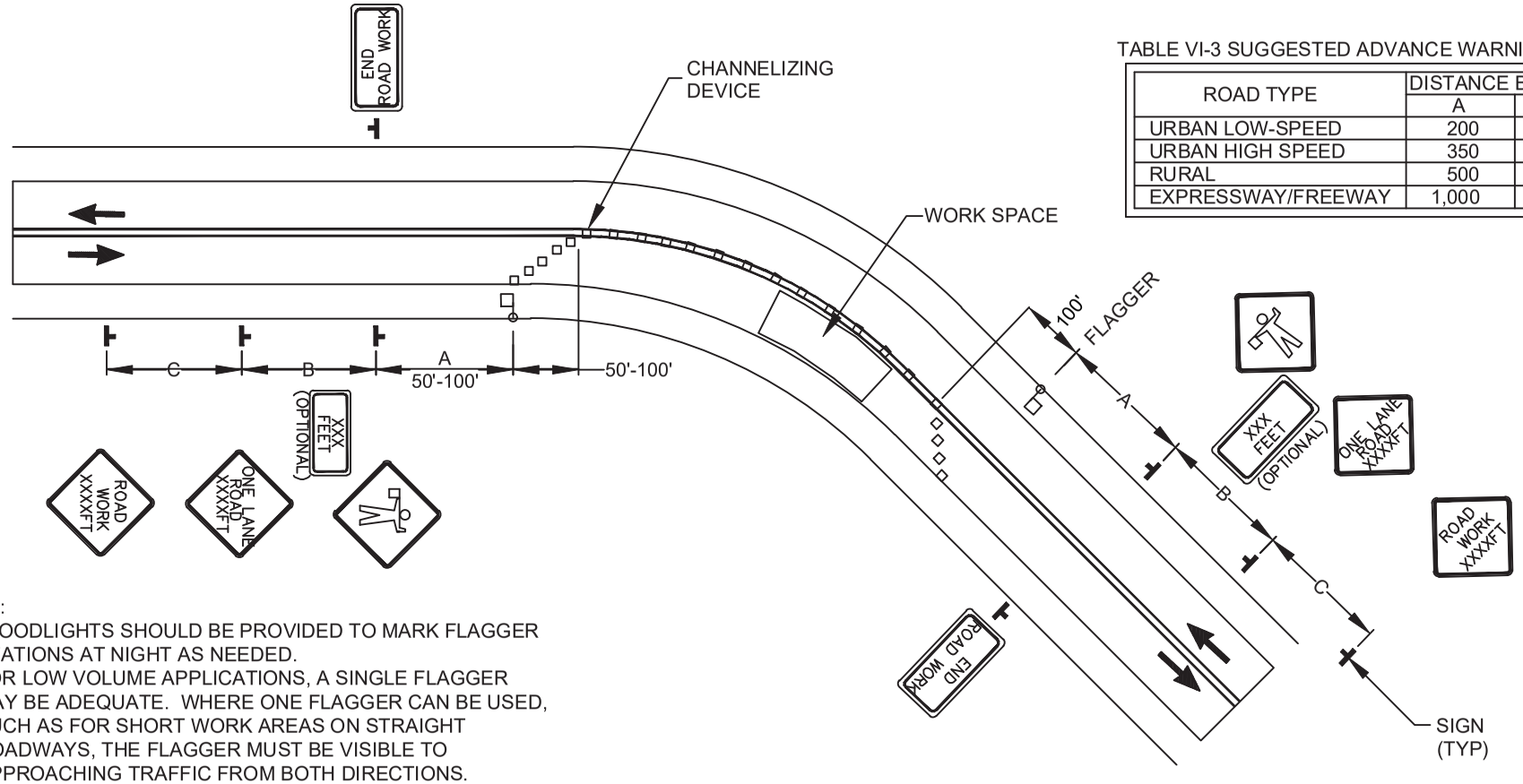

TABLE VI-3 SUGGESTED ADVANCE WARNING SIGN SPACING

ROAD TYPE	DISTANCE BETWEEN SIGNS		
	A	B	C
URBAN LOW-SPEED	200	200	200
URBAN HIGH SPEED	350	350	350
RURAL	500	500	500
EXPRESSWAY/FREEWAY	1,000	1,600	2,600

NOTES:

1. FLOODLIGHTS SHOULD BE PROVIDED TO MARK FLAGGER STATIONS AT NIGHT AS NEEDED.
2. FOR LOW VOLUME APPLICATIONS, A SINGLE FLAGGER MAY BE ADEQUATE. WHERE ONE FLAGGER CAN BE USED, SUCH AS FOR SHORT WORK AREAS ON STRAIGHT ROADWAYS, THE FLAGGER MUST BE VISIBLE TO APPROACHING TRAFFIC FROM BOTH DIRECTIONS.
3. CHANNELIZING DEVICES ARE TO BE EXTENDED TO A POINT WHERE THEY ARE VISIBLE TO APPROACHING TRAFFIC.
4. THE ROAD WORK AHEAD AND THE END ROAD WORK SIGNS MY BE OMITTED FOR SHORT DURATION OPERATIONS.
5. FLASHING WARNING LIGHTS AND/OR FLAGS MAY BE USED TO CALL ATTENTION TO THE ADVANCED WARNING SIGNS.
6. THIS STANDARD DERIVED FROM PART VI OF THE M.U.T.C.D., (STANDARDS AND GUIDES FOR STREET AND HIGHWAY CONSTRUCTION MAINTENANCE, UTILITY, AND INCIDENT MANAGEMENT OPERATIONS) ISSUED APRIL 1995.

FIGURE TA-10 LANE CLOSURE ONE LANE TWO-WAY TRAFFIC N.T.S.			FAYETTEVILLE PUBLIC WORKS COMMISSION FAYETTEVILLE, N.C.		NO.	DATE	REVISION
SHEET NO. 1 OF 1	DWG. NO. M.8	DWG. BY: FAYPWC	WATER RESOURCES ENGINEERING DEPARTMENT				
	DATE: JAN. 01, 2025	APPROVED BY: K.A.H.					

M8-DETOUR-ROAD-CLOSED.dwg

MINIMUM LENGTH OF BURIED PIPE BETWEEN CLOSED VALVE AND EXCAVATION FOR RESTRAINT		
BASED ON MINIMUM TYPE 2 BEDDING IN SILT SOIL		
Diameter (inches)	Depth of Cover (feet)	Length (feet)
16	3 - 3.99	221
16	4 - 5.99	173
16	6 - 7.99	120
16	8 - 9.99	92
16	>= 10	75
12	3 - 3.99	174
12	4 - 5.99	135
12	6 - 7.99	93
12	8 - 9.99	71
12	>= 10	57
10	3 - 3.99	149
10	4 - 5.99	115
10	6 - 7.99	79
10	8 - 9.99	60
10	>= 10	49
8	3 - 3.99	123
8	4 - 5.99	95
8	6 - 7.99	65
8	8 - 9.99	49
8	>= 10	40
6	3 - 3.99	95
6	4 - 5.99	73
6	6 - 7.99	50
6	8 - 9.99	38
6	>= 10	31

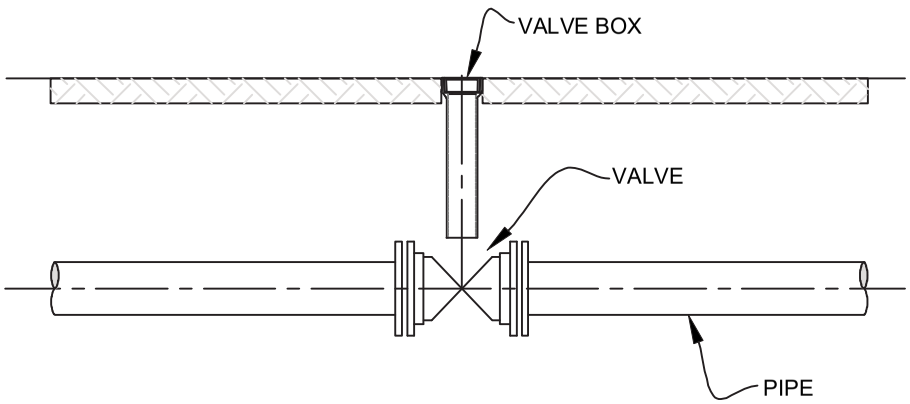

ELEVATION - EXISTING
N.T.S.

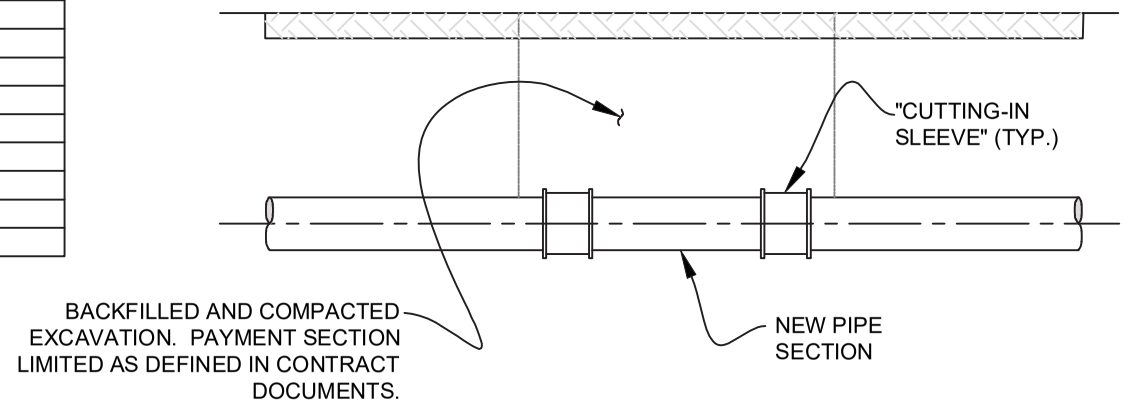

ELEVATION - PROPOSED
N.T.S.

VALVE REMOVAL WITH EXCAVATION N.T.S.			FAYETTEVILLE PUBLIC WORKS COMMISSION FAYETTEVILLE, N.C.		NO.	DATE	REVISION
SHEET NO. 1 OF 1	DWG. NO. M.15	DWG. BY: FAYPWC	WATER RESOURCES ENGINEERING DEPARTMENT	PWC			
	DATE: JAN. 01, 2025	APPROVED BY: K.A.H.					

M15-VAL-REMOVAL.dwg

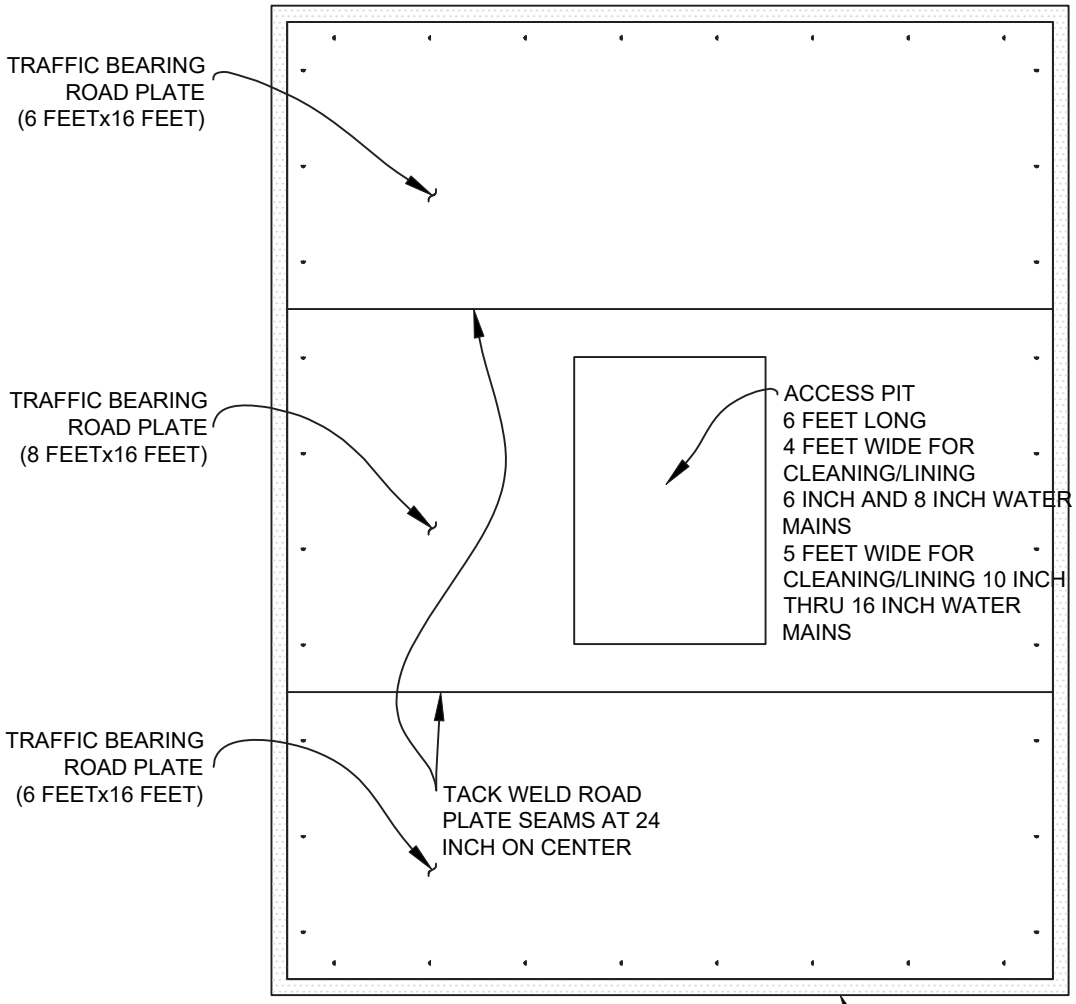

PLAN
N.T.S.

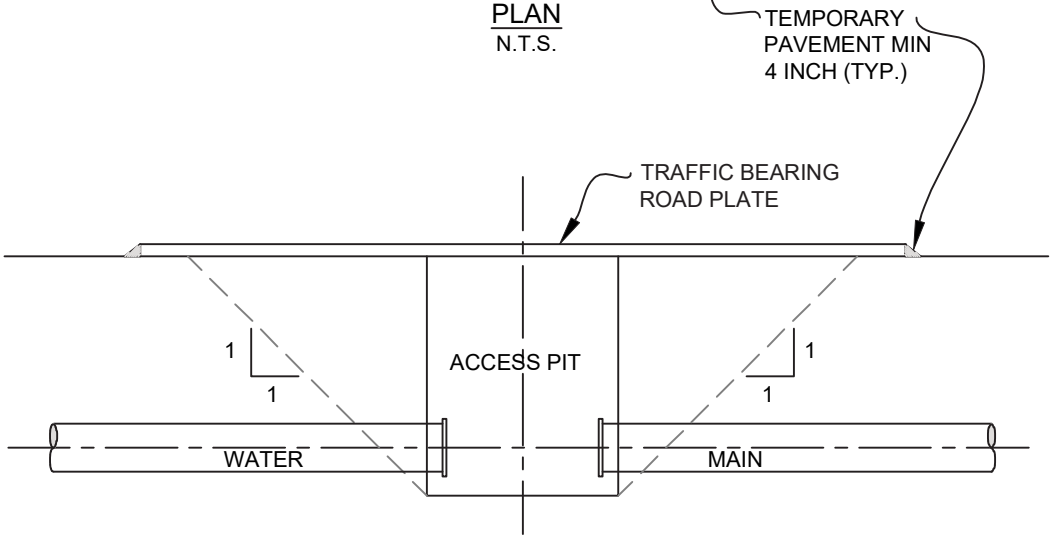

ELEVATION
N.T.S.

NOTE:
CONTRACTOR MAY ELECT TO USE TRENCH BOX, SHORING, OR OTHER APPROVED METHOD IN LIEU OF SLOPING THE TRENCH WALLS.

NO.	DATE	REVISION

FAYETTEVILLE PUBLIC WORKS COMMISSION
FAYETTEVILLE, N.C.

WATER RESOURCES ENGINEERING DEPARTMENT

ACCESS PIT IN PUBLIC STREET WITH TRAFFIC BEARING ROAD PLATES
N.T.S.

DWG. BY: FAYPWC
APPROVED BY: K.A.H.
DWG. NO. M.16
DATE: JAN. 01, 2025
SHEET NO. 1 OF 2

M16-ACCESS-PIT.dwg

MINIMUM LENGTH OF BURIED PIPE BETWEEN CLOSED VALVE AND EXCAVATION FOR RESTRAINT		
BASED ON MINIMUM TYPE 2 BEDDING IN SILT SOIL		
Diameter (inches)	Depth of Cover (feet)	Length (feet)
16	3 - 3.99	221
16	4 - 5.99	173
16	6 - 7.99	120
16	8 - 9.99	92
16	>= 10	75
12	3 - 3.99	174
12	4 - 5.99	135
12	6 - 7.99	93
12	8 - 9.99	71
12	>= 10	57
10	3 - 3.99	149
10	4 - 5.99	115
10	6 - 7.99	79
10	8 - 9.99	60
10	>= 10	49
8	3 - 3.99	123
8	4 - 5.99	95
8	6 - 7.99	65
8	8 - 9.99	49
8	>= 10	40
6	3 - 3.99	95
6	4 - 5.99	73
6	6 - 7.99	50
6	8 - 9.99	38
6	>= 10	31

ACCESS PIT IN PUBLIC STREET WITH TRAFFIC BEARING ROAD PLATES			FAYETTEVILLE PUBLIC WORKS COMMISSION FAYETTEVILLE, N.C.		NO.	DATE	REVISION
SHEET NO. 2 OF 2	DWG. NO. M.16	DWG. BY: FAYPWC	WATER RESOURCES ENGINEERING DEPARTMENT				
	DATE: JAN. 01, 2025	APPROVED BY: K.A.H.					

M16-ACCESS-PIT.dwg

NOTES:

1. SANITARY SEWER REPAIR SHALL BE APPROVED BY FAYPWC PRIOR TO MAKING THE REPAIR. IF THE REPAIR IS WITHIN 20' OF AN EXISTING MANHOLE, THE CONTRACTOR SHALL BE REQUIRED TO REMOVE AND RELAY PIPE TO NEAREST MANHOLE, UNLESS OTHERWISE DIRECTED BY FAYPWC.

2. ALL MATERIALS OF CONSTRUCTION SHALL BE IN ACCORDANCE WITH THE STANDARDS AND SPECIFICATIONS OF THE FAYETTEVILLE PUBLIC WORKS COMMISSION.

3. CONTRACTOR SHALL PROVIDE ALL NECESSARY PUMPS, HEADER PIPE, PUMPING EQUIPMENT, ETC. PRIOR TO BEGINNING CONSTRUCTION. DUPLICATE SEWAGE HANDLING PUMPS, PIPING, ETC. SHALL BE ON-SITE AND AVAILABLE FOR IMMEDIATE USE SHOULD PRIMARY PUMP OR FORCE MAIN FAIL. INSURE PUMPS, HEADER PIPING, ETC. ARE PROPERLY SIZED AND OPERATIONAL BEFORE BEGINNING WORK.

4. PIPE REPAIR SHALL EXHIBIT STRAIGHT HORIZONTAL ALIGNMENT AND INVERT SHALL BE THE SAME AS THE EXISTING PIPE SLOPE. DEFLECTIONS OF HORIZONTAL AND VERTICAL ALIGNMENT ARE NOT ACCEPTABLE.

5. PIPE SHALL BE BACKFILLED AND COMPACTED IN ACCORDANCE WITH FAYPWC STANDARD SPECIFICATION.

6. REPLACEMENT PIPE SHALL BE PROPERLY BEDDED IN ACCORDANCE WITH FAYPWC STANDARD DETAIL S.13.

7. THERE SHALL BE NO MORE THAN 1/4" SPACE BETWEEN THE EXISTING SEWER MAIN AND THE REPLACEMENT PIPE AT EACH END.

8. DAMAGED SECTION SHALL BE CUT OUT WITHOUT DAMAGING THE PIPE TO REMAIN.

9. DI SEWER PIPE AND FITTINGS SHALL HAVE AN INTERIOR COATING OF PROTECTO 401 OR APPROVED EQUAL.

10. DI PIPE SHALL BE UTILIZED WHEN STATE MINIMUM SEPARATION REQUIREMENTS CANNOT BE MET OR AS DIRECTED BY FAYPWC.

11. PIPE REPAIRS ON MATERIALS OTHER THAN SHOWN, SHALL BE AS DIRECTED BY FAYPWC.

12. THE MINIMUM LENGTH OF REPAIR SHALL BE 5 FEET, UNLESS OTHERWISE DIRECTED BY FAYPWC.

GRAVITY SANITARY SEWER PIPE REPAIR			FAYETTEVILLE PUBLIC WORKS COMMISSION FAYETTEVILLE, N.C.	PWC	NO.	DATE	REVISION
					1	01/05	REVISED REPLACEMENT PIPE
SHEET NO. 1 OF 3	DWG. NO. S.15	DWG. BY: FAYPWC	WATER RESOURCES ENGINEERING DEPARTMENT		2	07/11	REVISED NOTES
	DATE: JAN. 01, 2025	APPROVED BY: K.A.H.					

S15-VCP-REPAIR.dwg

1. ALL WATER MAINS, LATERALS AND APPURTENANCES SHALL BE INSTALLED AND TESTED IN ACCORDANCE WITH FAYPWC STANDARDS.

2. CONTRACTOR SHALL FIELD VERIFY THE LOCATION OF EXISTING UTILITIES PRIOR TO CONSTRUCTION.

3. CONTRACTOR SHALL PROVIDE A MINIMUM OF 48 HOURS NOTICE FOR ALL WATER OUTAGES.

4. CONSTRUCTION STAKING IS REQUIRED FOR ALL FAYPWC WATER AND SEWER UTILITY INSTALLATIONS. CUT SHEETS, SIGNED AND SEALED BY A NC PLS, SHALL BE PROVIDED TO THE FAYPWC WATER RESOURCES ENGINEERING DEPARTMENT AND THE CONTRACTOR IN ADVANCE OF CONSTRUCTION FOR FAYPWC WATER AND SEWER UTILITIES.

5. CONTRACTOR SHALL MAINTAIN A COPY OF THE SIGNED AND SEALED CUT SHEET ON THE JOB SITE. CONSTRUCTION ON FAYPWC WATER AND SEWER UTILITIES CANNOT BEGIN UNTIL THE CONTRACTOR POSSESSES, ON SITE, A SIGNED AND SEALED CUT SHEET FROM THE PROFESSIONAL LAND SURVEYOR.

6. ALL NEW WATER AND SEWER MAINS, LATERALS, AND APPURTENANCES SHALL BE TESTED AND/OR DISINFECTED IN ACCORDANCE WITH FAYPWC STANDARDS PRIOR TO PLACING INTO SERVICE.

7. CONTRACTOR SHALL COORDINATE TESTING AND INSPECTION WITH THE FAYPWC PROJECT COORDINATOR.

8. CONTRACTOR SHALL REPAIR ALL WATER LATERALS AND MAINS DAMAGED DURING CONSTRUCTION. THE CONTRACTOR SHALL REPORT IMMEDIATELY ALL WATER MAIN AND LATERAL BREAKS TO THE FAYPWC PROJECT COORDINATOR. THE CONTRACTOR SHALL INITIATE IMMEDIATE REPAIRS IN ACCORDANCE WITH FAYPWC STANDARDS. CONTRACTOR SHALL NOT OPERATE FAYPWC WATER MAIN VALVES WITHOUT FAYPWC APPROVAL AND SHALL COORDINATE ALL VALVE CLOSINGS WITH FAYPWC.

9. THE CONTRACTOR SHALL NOT USE HOUSE HOSE BIBBS OR ANY OTHER METHOD OF BLOW OFF WHICH ALLOWS DOMESTIC WATER CONTAINING SEDIMENTS OR HIGH LEVELS OF CHLORINE TO PASS THRU RESIDENT'S METERS. THE CONTRACTOR SHALL BE RESPONSIBLE FOR ALL DAMAGES RESULTING FROM ALLOWING "DIRTY" WATER TO ENTER RESIDENT'S PLUMBING SYSTEM, SUCH AS WATER HEATERS, STAINED CLOTHING, CLOGGED SCREENS, ETC.

10. TRANSFER OF WATER SERVICES SHALL BE ACCOMPLISHED AS FOLLOWS:
    A. INSTALL, TEST AND STERILIZE NEW MAIN AND LATERALS. LATERALS SHALL BE INSTALLED 18" INSIDE RIGHT-OF-WAY UNLESS OTHERWISE DIRECTED BY FAYPWC.
    B. TRANSFER EXISTING METER TO NEW METER BOX AND TIE NEW WATER LATERAL TO EXISTING DOMESTIC SERVICE UTILIZING BRASS FITTINGS. SAME METER NUMBER SHALL BE INSTALLED ON SAME ADDRESS AND/OR CUSTOMER. BLOW OFF SERVICE AT HOSE BIBB ON HOUSE ONLY AFTER METER HAS BEEN TRANSFERRED.
    C. AFTER ALL SERVICES ARE TRANSFERRED TO THE NEW SYSTEM, SHUT OFF VALVE ON EXISTING SYSTEM AND ABANDON EXISTING MAINS IN ACCORDANCE WITH FAYPWC REQUIREMENTS.
    D. CONTRACTOR SHALL SUPPLY NEW METER BOXES AND DISPOSE OF EXISTING METER BOXES.

11. CONTRACTOR SHALL ABANDON ("KILL-OUT") ANY EXISTING WATER SERVICES THAT WILL NOT BE UTILIZED BY CUTTING THE SERVICE AT THE MAIN, PLUGGING THE CORPORATION, AND TURNING OFF THE CORPORATION AT THE METER BOX, THE ABANDONED SERVICE IS TO BE CUT OR CRIMPED, AND BURIED A MINIMUM OF 3 FEET BELOW GRADE.

12. ALL EXISTING UTILITIES IMPACTED BY CONSTRUCTION SHALL BE ADJUSTED TO FINISHED GRADE, IN ACCORDANCE WITH FAYPWC REQUIREMENTS.

13. ALL WORK ON FAYPWC WATER UTILITIES (MAINS, LATERALS, ETC) SHALL BE PERFORMED BY A LICENSED UTILITY CONTRACTOR. THE FAYETTEVILLE PUBLIC WORKS COMMISSION SHALL OBSERVE AND APPROVE ALL WORK ON FAYPWC WATER UTILITIES. ALL WORK SHALL BE COMPLETED IN ACCORDANCE WITH FAYPWC REQUIREMENTS.

14. SEPARATION REQUIREMENTS:
    A. **LATERAL SEPARATION OF SEWERS AND WATER MAINS:** WATER MAINS SHALL BE LAID AT LEAST 10 FEET LATERALLY FROM EXISTING OR PROPOSED SEWER MAIN/LATERAL, UNLESS LOCAL CONDITIONS OR BARRIERS PREVENT A 10-FOOT LATERAL SEPARATION - IN WHICH CASE:
        i. THE WATER MAIN IS LAID IN A SEPARATE TRENCH, WITH THE ELEVATION OF THE BOTTOM OF THE WATER MAIN AT LEAST 18 INCHES ABOVE THE TOP OF THE SEWER MAIN/LATERAL; OR
        ii. THE WATER MAIN IS LAID IN THE SAME TRENCH AS THE SEWER MAIN/LATERAL WITH THE WATER MAIN LOCATED AT ONE SIDE ON A BENCH OF UNDISTURBED EARTH AND WITH THE ELEVATION OF THE BOTTOM OF THE WATER MAIN AT LEAST 18 INCHES ABOVE THE TOP OF THE SEWER MAIN/LATERAL.
    B. **CROSSING A WATER MAIN OVER A SEWER:** WHENEVER IT IS NECESSARY FOR A WATER MAIN TO CROSS OVER A SEWER MAIN/LATERAL, THE WATER MAIN SHALL BE LAID AT SUCH AN ELEVATION THAT THE BOTTOM OF THE WATER MAIN IS AT LEAST 18-INCHES ABOVE THE TOP OF THE SEWER MAIN/LATERAL.
    C. **CROSSING WATER MAIN UNDER A SEWER:** WHENEVER IT IS NECESSARY FOR A WATER MAIN TO CROSS UNDER A SEWER MAIN/LATERAL, A MINIMUM OF 18-INCHES OF SEPARATION SHALL BE PROVIDED. BOTH THE WATER MAIN AND THE SEWER MAIN/LATERAL SHALL BE CONSTRUCTED OF DUCTILE IRON MATERIAL AND WITH JOINTS EQUIVALENT TO WATER MAIN STANDARDS FOR A DISTANCE OF 10-FEET ON EACH SIDE OF THE POINT OF CROSSING, A SECTION OF WATER MAIN PIPE SHALL BE CENTERED AT THE POINT OF CROSSING.

WATER UTILITY NOTES			FAYETTEVILLE PUBLIC WORKS COMMISSION FAYETTEVILLE, N.C.	PWC	NO.	DATE	REVISION
					1	01/01/18	ADDED NOTES 6, 8
SHEET NO. 1 OF 2	DWG. NO. W.1	DWG. BY: FAYPWC	WATER RESOURCES ENGINEERING DEPARTMENT		2	06/01/21	ADDED NOTES 1-7 AND RENUMBERED
	DATE: JAN. 01, 2025	APPROVED BY: K.A.H.			3	11/23	REVISED NOTES 10, 14

W1-WATER-UTILITY-NOTES.dwg

D. **CROSSING STORM DRAINAGE LINES:** A MINIMUM OF 12-INCHES OF VERTICAL CLEARANCE SHALL BE MAINTAINED BETWEEN A WATER LINE CROSSING OVER A STORM DRAINAGE LINE UNLESS DUCTILE IRON PIPE IS USED. IN ADDITION, THREE AND A HALF (3.5) FEET OF COVER MUST BE MAINTAINED OVER THE WATER MAIN OR IT SHALL BE DUCTILE IRON. IF DUCTILE IRON PIPE IS USED THEN TWO AN A HALF (2.5) FEET OF COVER MUST BE MAINTAINED OVER THE WATER MAIN AND A MINIMUM OF 12-INCHES OF VERTICAL CLEARANCE SHALL BE MAINTAINED BETWEEN THE WATER MAIN AND THE STORM DRAINAGE LINE. WHERE A WATER MAIN CROSSES UNDER A STORM DRAINAGE LINE THE MINIMUM OF TWELVE (12) INCHES OF VERTICAL SEPARATION SHALL BE MAINTAINED AND THE WATER MAIN SHALL BE DUCTILE IRON FOR A DISTANCE OF 10-FEET ON EACH SIDE OF THE CROSSING.

15. **WATER OUTAGES:** THE CONTRACTOR SHALL SCHEDULE A COORDINATION MEETING WITH THE FAYPWC PROJECT COORDINATOR AND PROJECT ENGINEER A MINIMUM OF THREE (3) WORKING DAYS PRIOR TO ANY PLANNED WATER OUTAGE. THE COORDINATION MEETING SHALL BE CONDUCTED PRIOR TO ANY NOTICES BEING ISSUED. ADDITIONALLY, THE CONTRACTOR SHALL LOCATE (VERTICALLY AND HORIZONTALLY) ANY UTILITIES WITHIN THE WORK AREA, IN ACCORDANCE WITH THESE CONTRACT DOCUMENTS. THE LOCATIONS OF ALL UTILITIES WITHIN THE WORK AREA SHALL BE DETERMINED PRIOR TO THE COORDINATION MEETING. ANY CONFLICTS WITH THE PENDING WORK AND THE EXISTING UTILITIES SHALL BE IDENTIFIED AND A PLAN FOR RESOLVING ANY CONFLICTS SHALL BE PRESENTED. THE PURPOSE OF THIS COORDINATION MEETING IS TO ENSURE THAT THE CONTRACTOR HAS A GOOD UNDERSTANDING OF THE REQUIREMENTS RELATED TO THE PENDING OUTAGE, VERIFY THAT THERE ARE NO UTILITY CONFLICTS THAT WILL PREVENT THE WORK FROM BEING COMPLETED, ALL EQUIPMENT IS IN GOOD WORKING ORDER, ALL EQUIPMENT IS FUNCTIONAL, ALL MATERIALS ARE ON SITE, ALL NECESSARY TOOLS ARE ON SITE, DISCUSS ANY NECESSARY CONTINGENCY PLANS, AND ANY OTHER ITEMS NECESSARY TO ENSURE THAT THE FAYETTEVILLE PUBLIC WORKS COMMISSION HAS CONFIDENCE THAT THE WORK CAN BE ACCOMPLISHED WITHIN THE GIVEN TIME PERIOD. SHOULD, FOR ANY REASON, THE FAYETTEVILLE PUBLIC WORKS COMMISSION DEEM THAT THE CONTRACTOR IS NOT PREPARED FOR THE PROPOSED OUTAGE, THE OUTAGE NOTIFICATIONS WILL NOT BE DISTRIBUTED AND THE OUTAGE SHALL BE POSTPONED A MINIMUM OF TWO (2) WEEKS. THE FAYETTEVILLE PUBLIC WORKS COMMISSION WILL PROVIDE WRITTEN NOTIFICATION TO THE CONTRACTOR OF THIS DECISION. NO ADDITIONAL CONTRACT TIME WILL BE GRANTED FOR THIS DELAY. SHOULD THE CONTRACT TIME EXPIRE WITHIN THAT TWO (2) WEEK PERIOD, THE FAYETTEVILLE PUBLIC WORKS COMMISSION RESERVES THE RIGHT TO ASSESS LIQUIDATED DAMAGES, AS OUTLINED IN THESE CONTRACT DOCUMENTS.

ONCE THE WATER OUTAGE NOTIFICATIONS HAVE BEEN ISSUED, A FOLLOW-UP COORDINATION MEETING WITH THE FAYPWC PROJECT COORDINATOR AND PROJECT ENGINEER SHALL BE HELD A MINIMUM OF 24 HOURS PRIOR TO THE SCHEDULED THE PURPOSE OF THIS MEETING IS TO VERIFY THAT THE CONTRACTOR IS PREPARED TO PROCEED WITH THE OUTAGE, AND THAT ALL EQUIPMENT, MATERIALS, TOOLS, AND ALL OTHER INCIDENTALS ARE ON THE PROJECT SITE AND FUNCTIONING. IF FOR ANY REASON THE FAYETTEVILLE PUBLIC WORKS COMMISSION DEEMS THAT THE CONTRACTOR IS NOT PREPARED, THE OUTAGE SHALL BE POSTPONED AND ALL CUSTOMERS IMMEDIATELY NOTIFIED OF THE CANCELLATION. THE OUTAGE SHALL BE POSTPONED A MINIMUM OF TWO (2) WEEKS. NO ADDITIONAL CONTRACT TIME WILL BE GRANTED FOR THIS DELAY. SHOULD THE CONTRACT TIME EXPIRE WITHIN THAT TWO (2) WEEK PERIOD, THE FAYETTEVILLE PUBLIC WORKS COMMISSION RESERVES THE RIGHT TO ASSESS LIQUIDATED DAMAGES, AS OUTLINED IN THESE CONTRACT DOCUMENTS.

THE CONTRACTOR SHALL COMPLETE THE REQUIRED WORK AND RESTORE WATER SERVICE WITHIN THE GIVEN TIME PERIOD FOR THE OUTAGE. IF THE FAYPWC PROJECT COORDINATOR DETERMINES THAT THE CONTRACTOR WILL NOT RESTORE WATER SERVICE WITHIN THE APPROVED TIMEFRAME, THE FAYPWC PROJECT COORDINATOR WILL DIRECT THE CONTRACTOR ON HOW TO RESTORE WATER SERVICE. THE CONTRACTOR SHALL ADHERE TO ALL INSTRUCTIONS GIVEN BY THE FAYPWC PROJECT COORDINATOR.

SHOULD THE CONTRACTOR FAIL TO COMPLETE THE WORK WITHIN THE ALLOTTED TIME, THE FAYETTEVILLE PUBLIC WORKS COMMISSION SHALL ASSESS A PENALTY OF $500 PER 15-MINUTE INTERVAL OR ANY PORTION THEREOF UNTIL WATER SERVICE IS RESTORED. THIS PENALTY WILL BE DEDUCTED FROM THE CONTRACTOR'S PAY APPLICATION OR BE BILLED DIRECTLY TO THE CONTRACTOR. THE PENALTY MAY BE WAIVED FOR CIRCUMSTANCES BEYOND THE CONTRACTOR'S CONTROL, AS DEEMED BY THE FAYETTEVILLE PUBLIC WORKS COMMISSION. THE FAYPWC PROJECT COORDINATOR AND/OR PROJECT ENGINEER RESERVE THE RIGHT TO CANCEL OR POSTPONE THE OUTAGE AT ANY GIVEN TIME, IF DEEMED NECESSARY.

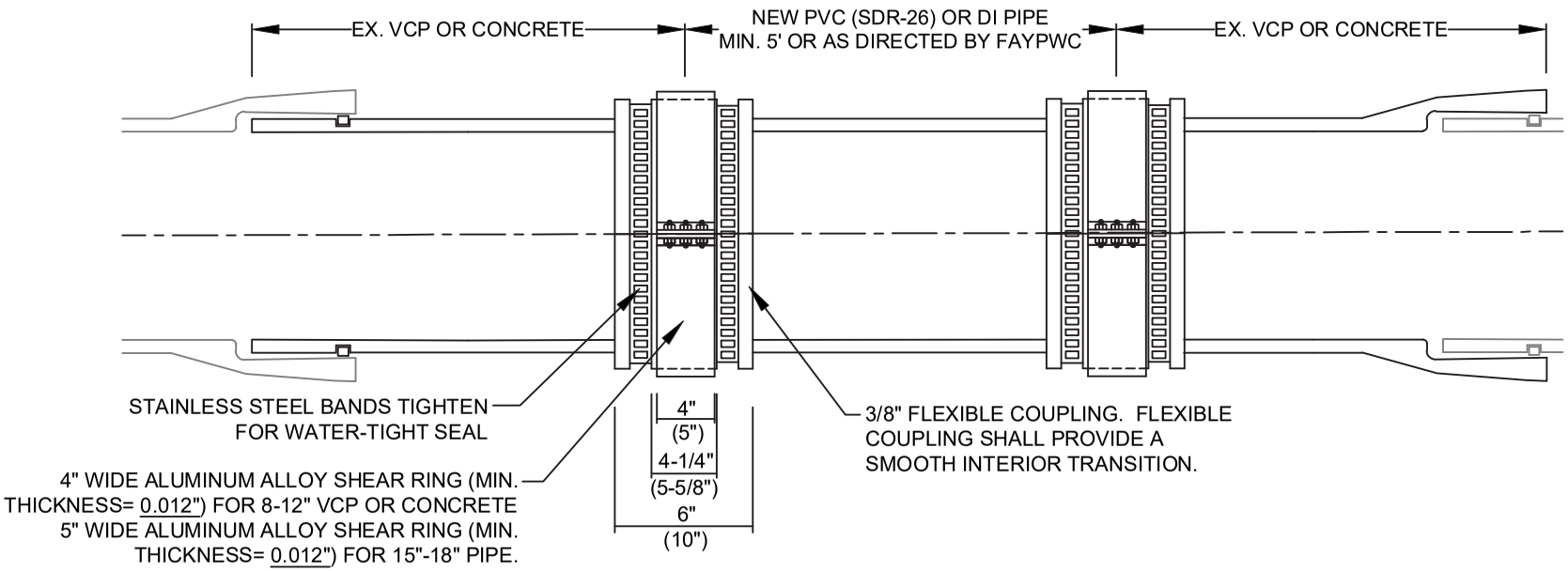

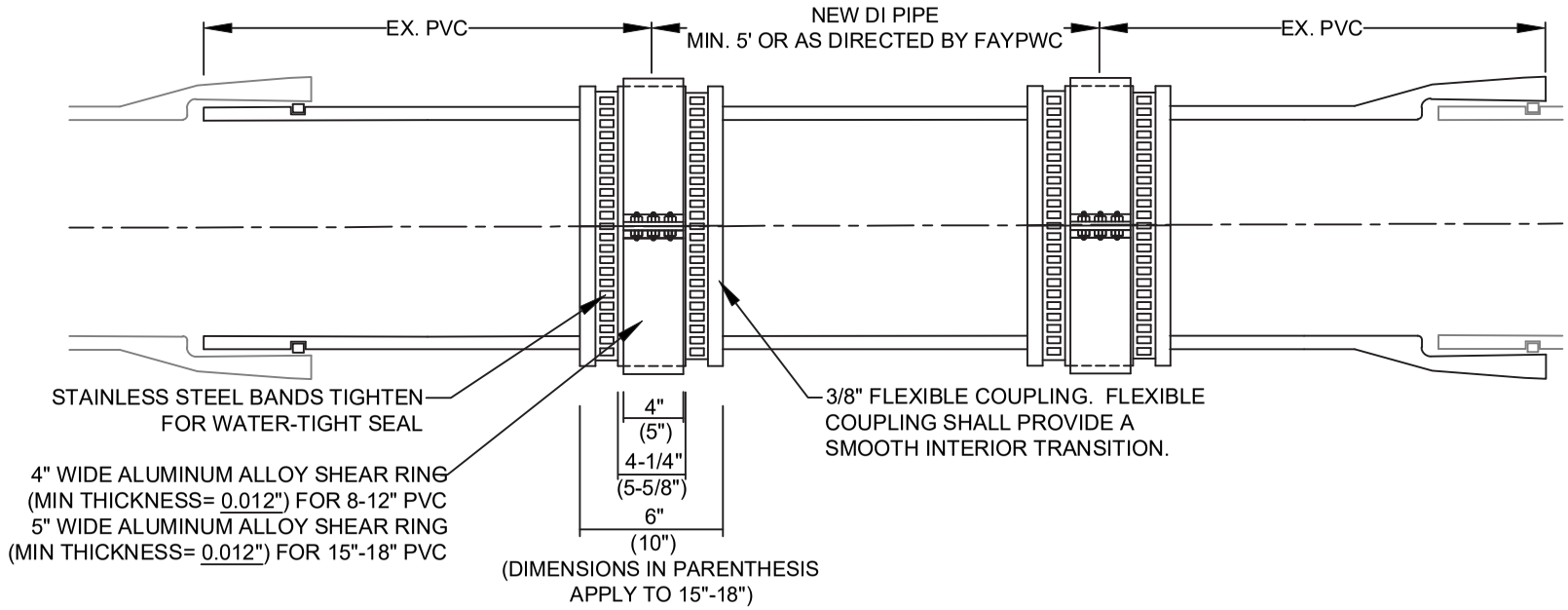

GRAVITY SANITARY SEWER PIPE REPAIR N.T.S.			FAYETTEVILLE PUBLIC WORKS COMMISSION FAYETTEVILLE, N.C.		NO.	DATE	REVISION
					1	01/05	REVISED REPLACEMENT PIPE
SHEET NO. 2 OF 3	DWG. NO. S.15	DWG. BY: FAYPWC	WATER RESOURCES ENGINEERING DEPARTMENT		2	07/11	REVISED NOTES
	DATE: JAN. 01, 2025	APPROVED BY: K.A.H.					

S15-VCP-REPAIR.dwg

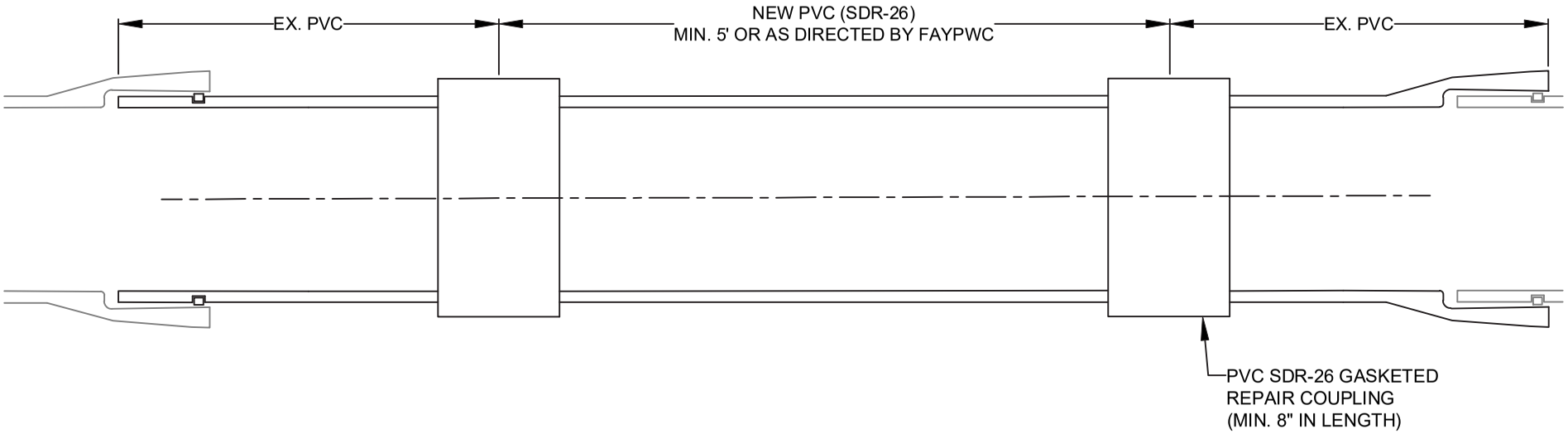

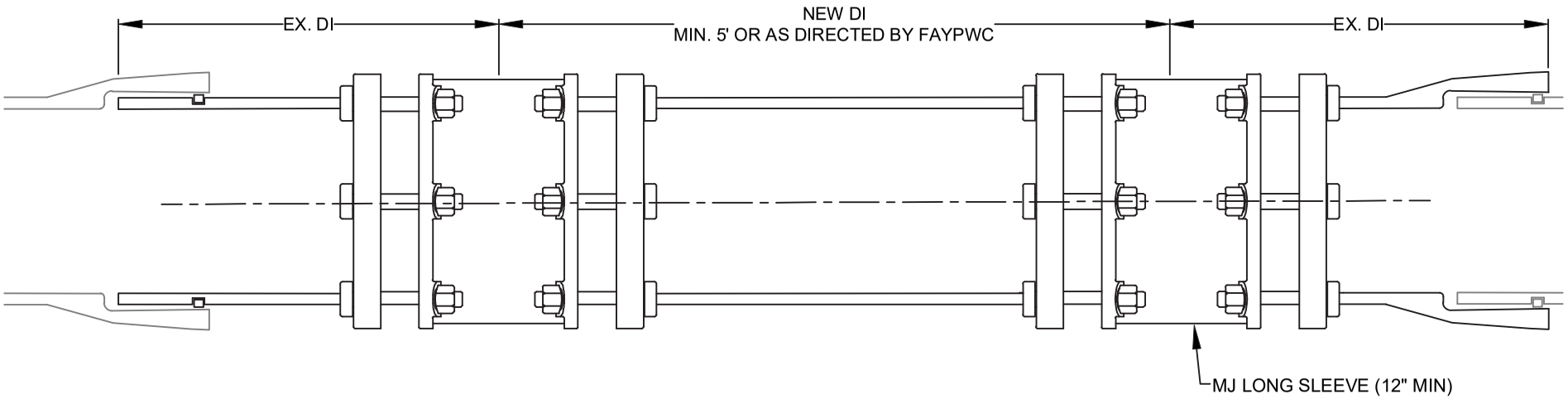

GRAVITY SANITARY SEWER PIPE REPAIR N.T.S.			FAYETTEVILLE PUBLIC WORKS COMMISSION FAYETTEVILLE, N.C.		NO.	DATE	REVISION
					1	01/05	REVISED REPLACEMENT PIPE
SHEET NO. 3 OF 3	DWG. NO. S.15	DWG. BY: FAYPWC	WATER RESOURCES ENGINEERING DEPARTMENT		2	07/11	REVISED NOTES, REPAIRS
	DATE: JAN. 01, 2025	APPROVED BY: K.A.H.					

S15-VCP-REPAIR.dwg

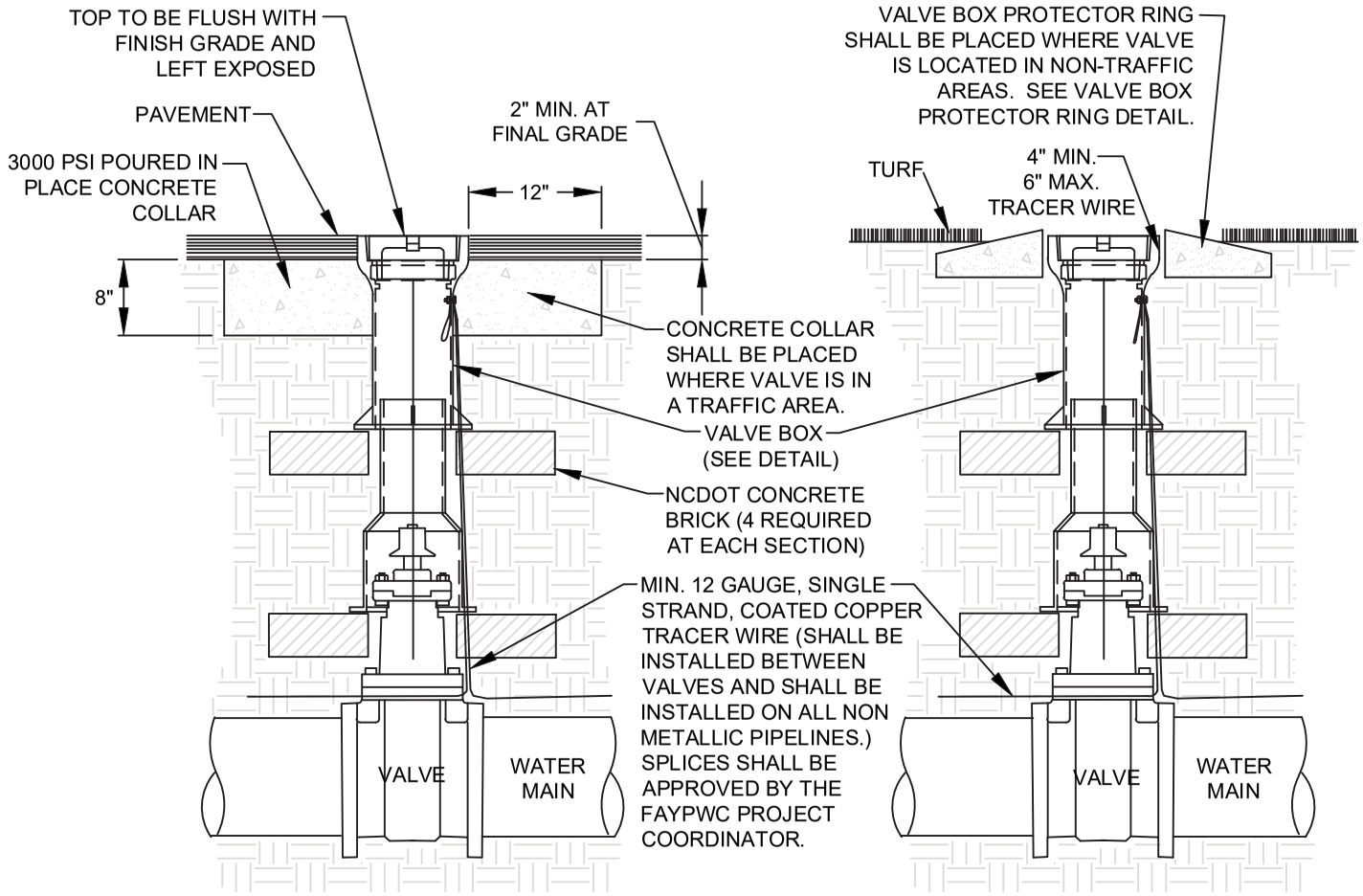

VALVE IN TRAFFIC AREA

VALVE IN NON-TRAFFIC AREA

NOTES:

1. ALL MATERIALS SHALL BE IN ACCORDANCE WITH FAYPWC STANDARDS.
2. RESILIENT WEDGE GATE VALVE SHALL BE AS MANUFACTURED BY MUELLER CORP., AMERICAN DARLING OR CLOW CORP.
3. ALL VALVES SHALL HAVE 2" SQUARE OPERATING NUT AND SHALL OPEN COUNTERCLOCKWISE.
4. VALVE BODY, BONNET, AND GATE SHALL BE IN ACCORDANCE WITH AWWA C-509/C-515 AND NSF61.
5. VALVE BODY AND BONNET SHALL BE COATED ON ALL INTERIOR AND EXTERIOR SURFACES WITH A FUSION BONDED EPOXY IN ACCORDANCE WITH AWWA C-550-90.
6. ALL VALVES 24" AND SMALLER SHALL HAVE A SAFE WORKING PRESSURE OF 250PSI.
7. SEE VALVE BOX DETAIL FOR ADDITIONAL INFORMATION.
8. SEE VALVE BOX PROTECTOR RING DETAIL FOR ADDITIONAL INFORMATION.
9. VALVE BOX SECTIONS ARE REQUIRED. THE USE OF PIPE IN LIEU OF VALVE BOX SECTIONS SHALL NOT BE PERMITTED.

GATE VALVE N.T.S.			FAYETTEVILLE PUBLIC WORKS COMMISSION FAYETTEVILLE, N.C.		NO.	DATE	REVISION
SHEET NO. 1 OF 1	DWG. NO. W.6	DWG. BY: FAYPWC	WATER RESOURCES ENGINEERING DEPARTMENT		1	6/06	ADDED NOTE NO. 9
	DATE: JAN. 01, 2025	APPROVED BY: K.A.H.			2	7/09	CLARIFIED NOTES

W6-GATEVALVE.dwg

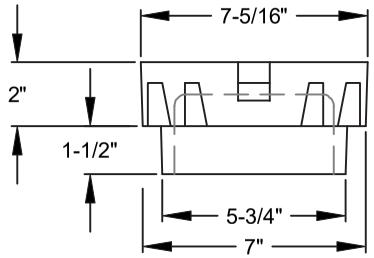

SECTION "A-A"

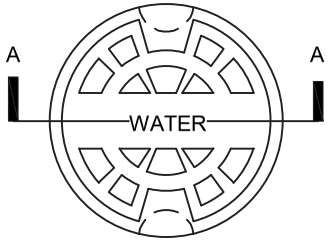

PLAN

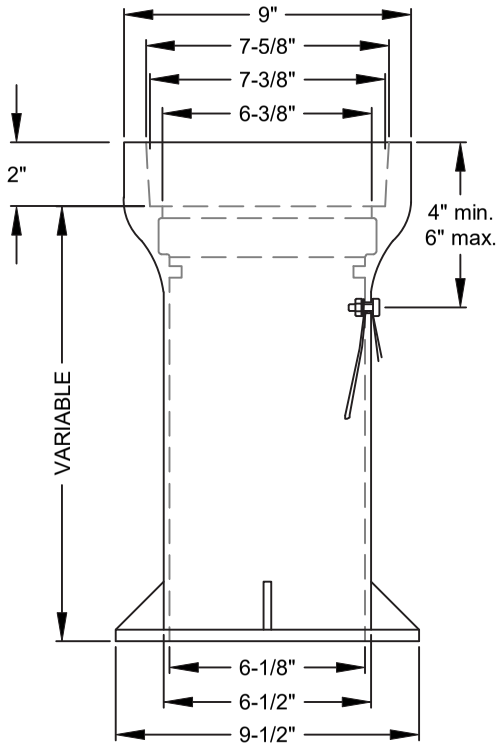

TOP SECTION

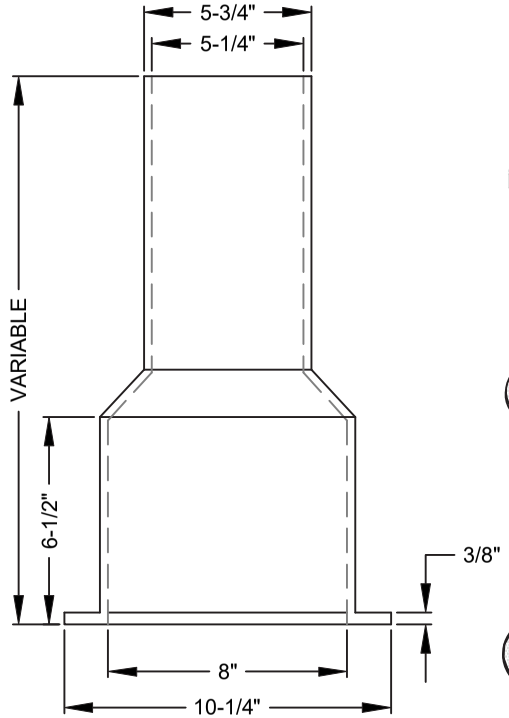

BOTTOM

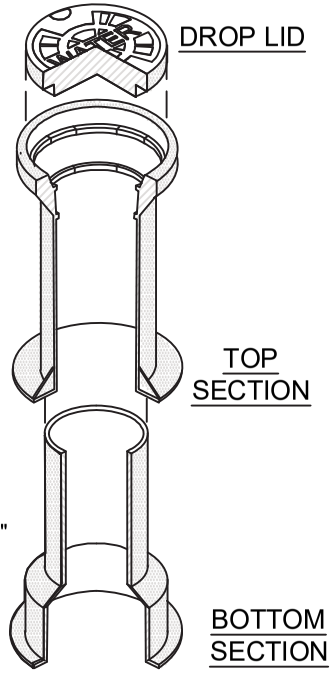

NOTES:

1. VALVE BOX SHALL BE 3 PART SLIP-TYPE MANUFACTURED BY SIGMA CORPORATION (VB-462), TYLER UNION (6855 SERIES), STAR PIPE PRODUCTS (VB-0004), OR APPROVED EQUAL.
2. VALVE BOX SHALL BE 3-PIECE CLOSE GRAINED CAST IRON SLIP-TYPE VALVE BOX WITH A MINIMUM THICKNESS OF 3/16".
3. VALVE BOX SHALL HAVE RAISED LETTERS "WATER" CAST INTO COVER.
4. VALVE BOX SHALL HAVE 3/8" HOLE DRILLED IN TOP SECTION THRU WHICH A 1/4"x1-1/2" GALVANIZED BOLT SHALL BE USED TO SECURE A MINIMUM 12 GAUGE, SINGLE STRAND, COATED COPPER OR COPPER CLAD STEEL TRACER WIRE FOR NON-FERROUS PIPE. A 1/2" WASHER SHALL BE USED BETWEEN NUT AND INSIDE OF BOX. TIGHTEN HAND TIGHT.
5. SCREW TYPE VALVE BOXES ARE NOT ACCEPTABLE.
6. DIMENSIONS SHOWN VARY BASED UPON THE MANUFACTURER. ACTUAL DIMENSIONS SHALL BE APPROVED BY FAYPWC.
7. VALVE BOX SECTIONS ARE REQUIRED. THE USE OF PIPE IN LIEU OF VALVE BOX SECTIONS SHALL NOT BE PERMITTED.
8. TRACING WIRE SHALL BE INSTALLED OUTSIDE OF BOX.
9. REFER TO FAYPWC DETAIL W.6 FOR INSTALLATION REQUIREMENTS.

VALVE BOX N.T.S.			FAYETTEVILLE PUBLIC WORKS COMMISSION FAYETTEVILLE, N.C.	PWC	NO.	DATE	REVISION
					1	07/09	ADDED NOTES 7, 8, AND CLARIFIED NOTES
SHEET NO. 1 OF 1	DWG. NO. W.7	DWG. BY: FAYPWC	WATER RESOURCES ENGINEERING DEPARTMENT		2	01/14	REVISED NOTES 1, 4, 6
	DATE: JAN. 01, 2025	APPROVED BY: K.A.H.					

W7-VALVEBOX.dwg

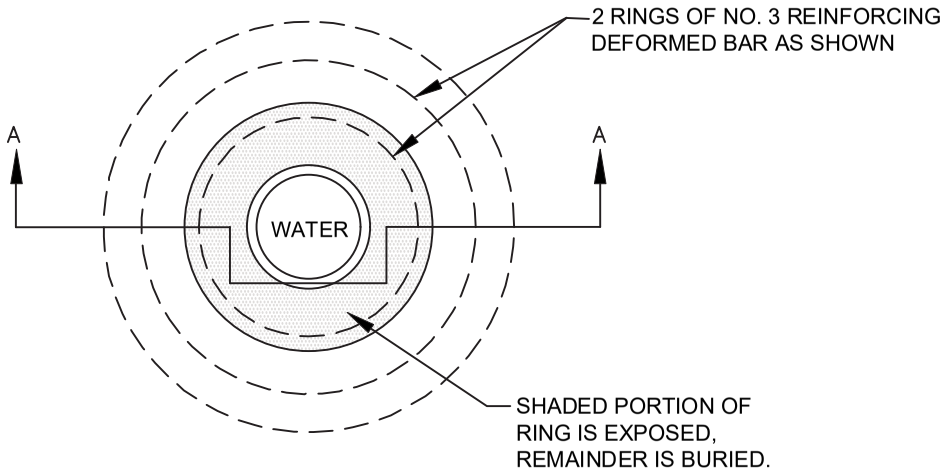

PLAN
N.T.S.

NOTES:

1. CONCRETE PROTECTOR RING SHALL BE 2500PSI PRECAST REINFORCED CONCRETE.
2. VALVE BOX SHALL BE AT GRADE WITH PROTECTOR RING EXTENDING 1/2" ABOVE GRADE.
3. SEE GATE VALVE AND BOX DETAIL.
4. VALVE BOX PROTECTOR RINGS SHALL BE INSTALLED AROUND VALVE BOX IN UNPAVED NON-TRAFFIC AREAS AND SHALL NOT CREATE A HINDRANCE TO MOWING OPERATIONS.

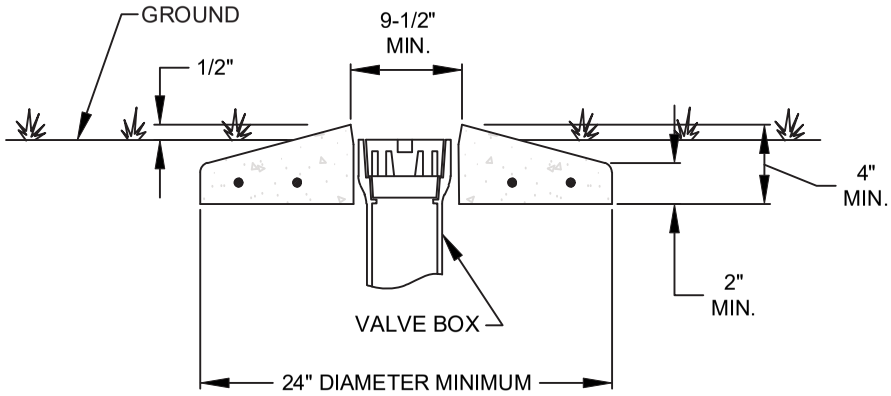

SECTION A-A
N.T.S.

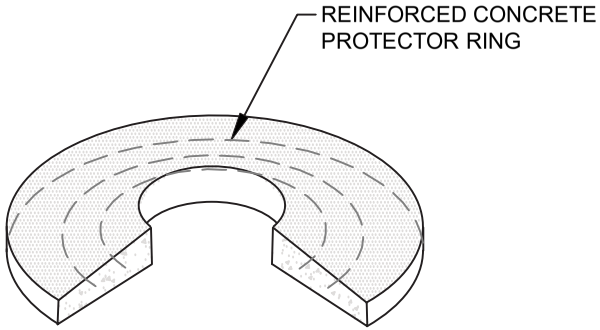

CUT AWAY VIEW
N.T.S.

VALVE BOX PROTECTOR RING N.T.S.			FAYETTEVILLE PUBLIC WORKS COMMISSION FAYETTEVILLE, N.C.		NO.	DATE	REVISION
SHEET NO. 1 OF 1	DWG. NO. W.8	DWG. BY: FAYPWC	WATER RESOURCES ENGINEERING DEPARTMENT				
	DATE: JAN. 01, 2025	APPROVED BY: K.A.H.					

W8-CONC-PROTECTOR-RING.dwg

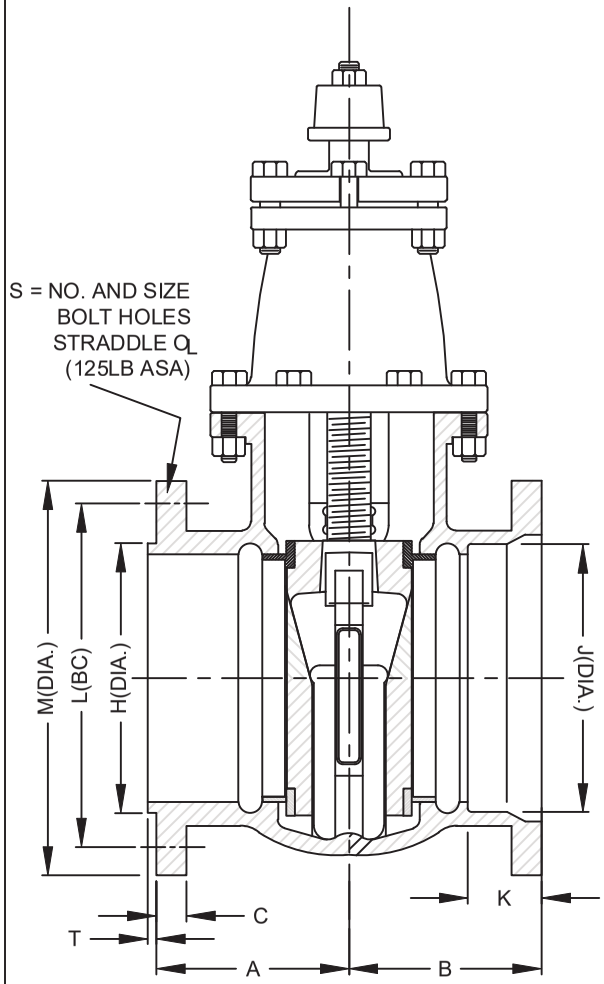

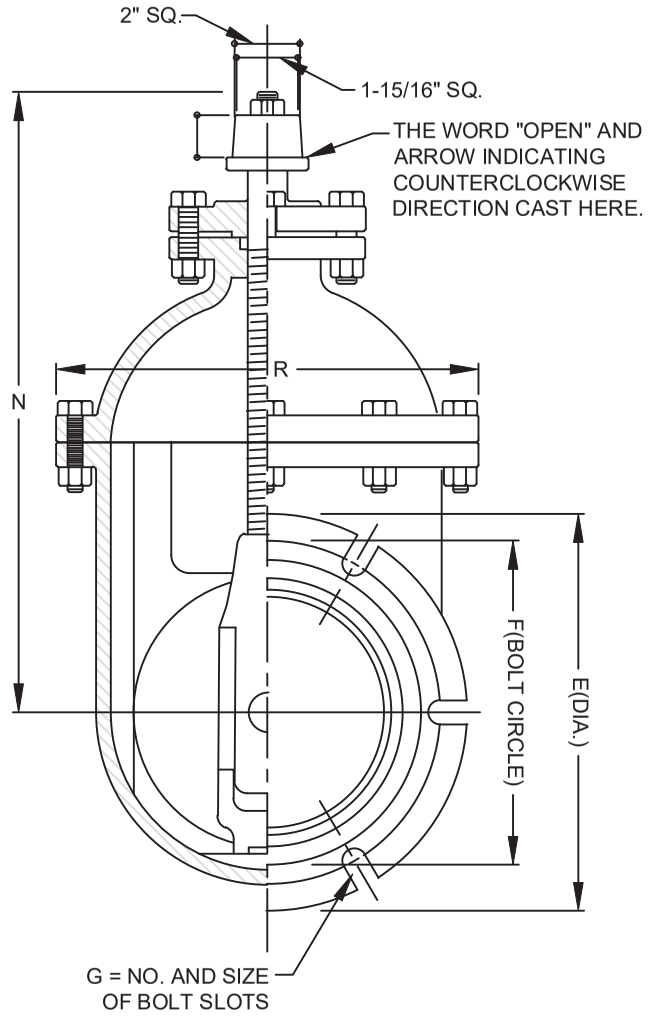

NOTES:

1. ALL MATERIALS SHALL BE IN ACCORDANCE WITH FAYPWC STANDARDS.
2. RAISED MALE FACE SHALL BE REQUIRED TO PROVIDE FOR PROPER ALIGNMENT OF THE TAPPING SLEEVE.
3. ALL VALVES SHALL HAVE 2" SQUARE OPERATING NUT AND SHALL OPEN COUNTERCLOCKWISE.
4. RESILIENT WEDGE GATE VALVE SHALL BE AS MANUFACTURED BY MUELLER CORP., AMERICAN DARLING, CLOW CORP., OR APPROVED EQUAL.
5. VALVE BODY, BONNET, AND GATE SHALL BE IN ACCORDANCE WITH AWWA C-509/C-515 AND NSF61.
6. VALVE BODY AND BONNET SHALL BE COATED ON ALL INTERIOR AND EXTERIOR SURFACES WITH A FUSION BONDED EPOXY IN ACCORDANCE WITH AWWA C-550-90.
7. ALL VALVES 24" AND SMALLER SHALL HAVE A SAFE WORKING PRESSURE OF 250PSI.
8. SEE TAPPING SLEEVE (DETAIL W.10 OR W.11) FOR ADDITIONAL INFORMATION.
9. DIMENSIONS SHOWN ARE FOR REFERENCE AND MAY VARY BASED UPON MANUFACTURER. VALVES SHALL BE SIMILAR IN NATURE TO THAT SHOWN AND SHALL NOT DEVIATE IN ESSENTIAL DETAILS.
10. ALL TAPPING SLEEVES SHALL BE HYDROSTATICALLY PRESSURE TESTED IN ACCORDANCE WITH FAYPWC SPECIFICATIONS. TEST SHALL BE WITNESSED AND APPROVED BY FAYPWC PROJECT COORDINATOR PRIOR TO BEGINNING TAPPING PROCESS.

VALVE SIZE	A	B	C	D	E	F	G	H	J	K	L	M	N	R	S	T	TURNS TO OPEN	WEIGHT W/ACC
4	4-3/8	5-7/8	15/16	1-1/2	9	7-1/2	4-7/8	4-63/64	4-29/32	2-1/2	7-1/2	9	14-1/8	9	8-3/4	1/4	14	118
6	6-7/8	6-1/4	1	1-5/8	11	9-1/2	6-7/8	6-63/64	7	2-1/2	9-1/2	11	17-5/8	11-3/4	8-7/8	1/4	21	175
8	6-1/2	7-1/4	1-1/8	1-3/4	13-1/4	11-3/4	6-7/8	8-63/64	9-5/32	2-1/2	11-3/4	13-1/2	21	14-1/4	8-7/8	1/4	28	274
12	7	8-1/4	1-1/4	1-3/4	17-7/8	16-1/4	8-7/8	12-63/64	13-5/16	2-1/2	17	19	28-1/4	19-1/8	12-1	1/4	39	570
16	8-1/2	9-1/8	1-7/16	2-1/16	23	21	12-7/8	16-15/16	17-35/64	3-1/2	21-1/4	23-1/2	38-5/8	26-1/8	16-1 1/8	1/4	55	1140
24	10-1/2	14-1/4	1-7/8	2-1/2	31-3/4	30	16-7/8	24-15/16	25-15/16	3-1/2	29-1/2	32	54-5/8	37-5/8	20-1 3/8	5/16	79	3225

TAPPING VALVE

N.T.S.

FAYETTEVILLE
PUBLIC WORKS COMMISSION
FAYETTEVILLE, N.C.

WATER RESOURCES
ENGINEERING DEPARTMENT

NO.	DATE	REVISION
1	07/09	ADDED NOTE 10, REVISED 4 AND 5
2	07/13	REVISED NOTES 4, 8, 10

SHEET NO. 1 OF 1

DWG. NO. W.9

DWG. BY: FAYPWC

DATE: JAN. 01, 2025

APPROVED BY: K.A.H.

W9-M.J.-TAPPING-VALVE.dwg

NOMINAL PIPE SIZE (INCH)	BRANCH SIZE	APPROX. WT. LBS.
4"	3",4"	28,30
6"	3",4",6"	36,38,45
8"	3",4",6",8"	42,44,48,66
10"	3",4",6",8",10"	45,48,55,70,80,
12"	3",4",6",8",10",12"	50,52,60,81,96,143
16"	3",4",6",8",10",12"	78,80,85,100,115,172
24"	3",4",6",8",10",12"	85,87,90,100,145,230

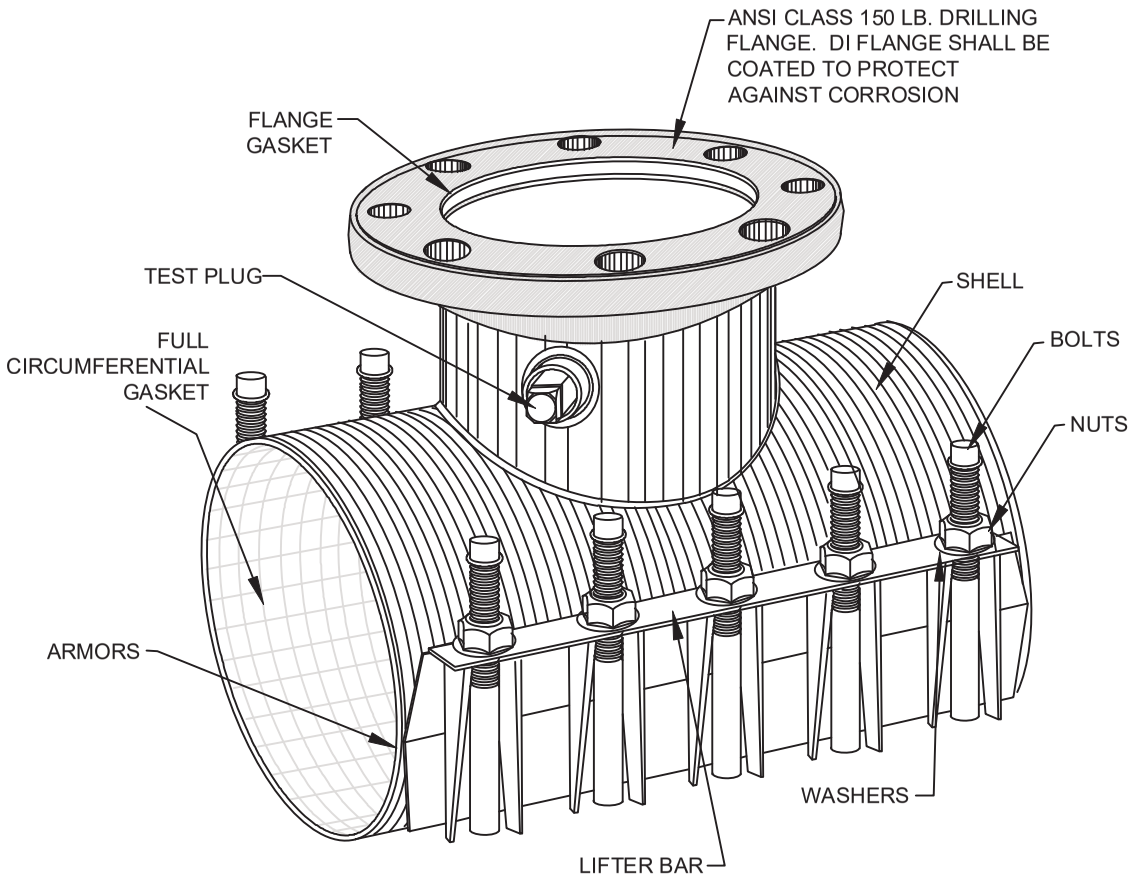

NOTES:

1. ALL MATERIALS SHALL BE IN ACCORDANCE WITH FAYPWC STANDARDS.
2. TAPPING SLEEVES SHALL BE AS MANUFACTURED BY ROMAC, SMITH-BLAIR, OR APPROVED EQUAL.
3. STAINLESS STEEL TAPPING SLEEVE MAY BE UTILIZED FOR ALL TAPPING OF MAINS UP TO AND INCLUDING 24" DIAMETER WITH 12" OR LESS BRANCH. BRANCH GREATER THAN 12" SHALL REQUIRE FULL BODY D.I. M.J. TAPPING SLEEVE (SEE DETAIL W.10).
4. SHELL AND LUGS SHALL BE STAINLESS STEEL PER ASTM A 240, TYPE 304 AND 304L.
5. BOLTS SHALL BE 5/8" UNC ROLLED THREAD, STAINLESS STEEL PER ASTM A 193 TYPE 304 4" NOM. PIPE SIZE SHALL HAVE MINIMUM 1/2" BOLTS.
6. NUTS SHALL BE HEAVY HEX STAINLESS STEEL PER ASTM A-194, TYPE 304.
7. WASHERS SHALL BE STEEL AND PLASTIC LUBRICATING WASHER.
8. GASKETS SHALL BE VIRGIN SBR PER ASTM D 2000 MAA 610, COMPOUNDED FOR WATER AND SEWER SERVICE.
9. FLANGE SHALL BE DUCTILE IRON PER ASTM 536, GRADE 65-45-12, OR STAINLESS STEEL PER ASTM A-240, TYPE 304.
10. DIMENSIONS SHOWN ARE FOR REFERENCE AND MAY VARY BASED UPON MANUFACTURER. SLEEVES SHALL BE SIMILAR IN NATURE TO THAT SHOWN AND SHALL NOT DEVIATE IN ESSENTIAL DETAILS.
11. PIPE SURFACES SHALL BE CLEANED THOROUGHLY TO PERMIT A GOOD SEAL PRIOR TO INSTALLATION.
12. ALL TAPPING SLEEVES SHALL BE HYDROSTATICALLY PRESSURE TESTED IN ACCORDANCE WITH FAYPWC SPECIFICATIONS. TEST SHALL BE WITNESSED AND APPROVED BY FAYPWC PROJECT COORDINATOR PRIOR TO BEGINNING TAPPING PROCESS.
13. THE NUMBER OF BOLTS, NUTS AND WASHERS SHOWN ARE FOR ILLUSTRATION ONLY, ACTUAL QUANTITY SHALL BE AS RECOMMENDED BY THE SLEEVE MANUFACTURER FOR THE REQUIRED SERVICE.
14. SEE DETAILS W.9 AND W.17 FOR ADDITIONAL REQUIREMENTS.

STAINLESS STEEL TAPPING SLEEVE
N.T.S.

FAYETTEVILLE
PUBLIC WORKS COMMISSION
FAYETTEVILLE, N.C.

WATER RESOURCES
ENGINEERING DEPARTMENT

SHEET NO. 1 OF 1

DWG. NO. W.11

DWG. BY: FAYPWC

DATE: JAN. 01, 2025

APPROVED BY: K.A.H.

NO.	DATE	REVISION
1	07/09	ADDED NOTES 2, 12, AND CLARIFIED NOTES
2	07/13	REVISED NOTES 3, 12, 14

W11-SS-TAPPING-SLEEVE.dwg

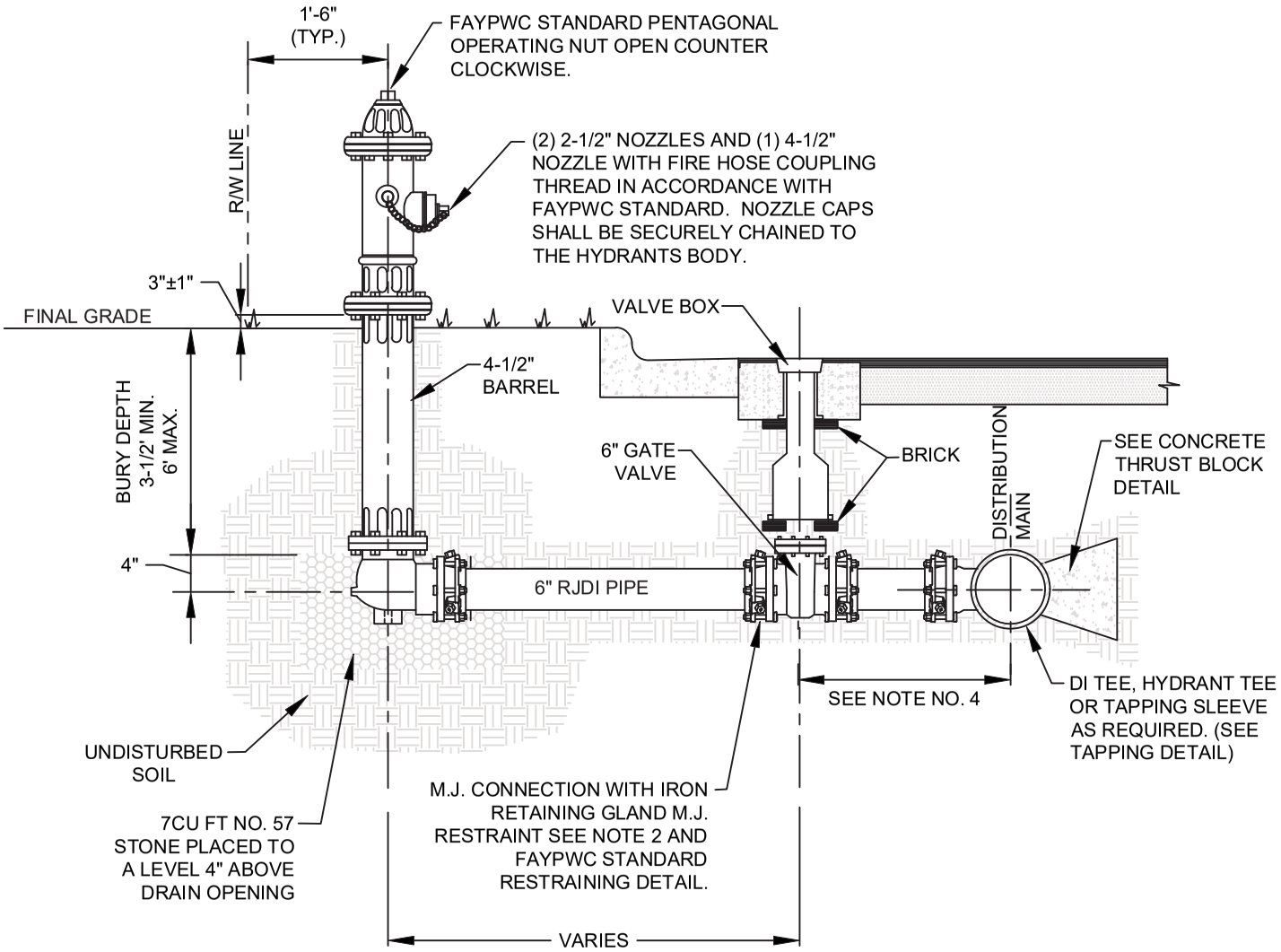

FIRE HYDRANT AND VALVE INSTALLATION N.T.S.			FAYETTEVILLE PUBLIC WORKS COMMISSION FAYETTEVILLE, N.C.		NO.	DATE	REVISION
SHEET NO. 1 OF 2	DWG. NO. W.13	DWG. BY: FAYPWC	WATER RESOURCES ENGINEERING DEPARTMENT	PWC	1	08/25/23	REVISED NOTES 16 AND 17
	DATE: JAN. 01, 2025	APPROVED BY: K.A.H.			2	07/01/09	REVISED NOTE NO. 2, REMOVED NOTE NO. 3 AND ALTERED RESTRAINT DETAIL
					3	07/01/16	REVISED NOTES

W13-FHCC.dwg

NOTES:

1. FIRE HYDRANT SHALL BE MODELS MANUFACTURED BY MUELLER CO. (CENTURIAN), AMERICAN VALVE AND HYDRANT CO. (MODEL MARK 73), CLOW MEDALLION OR APPROVED EQUAL.

2. ALL VALVES AND HYDRANTS SHALL HAVE M.J. CONNECTIONS WITH IRON RETAINING GLAND M.J. RESTRAINT.

3. HYDRANT VALVE SHALL BE PLACED AS CLOSE AS POSSIBLE TO THE MAIN, BUT DO NOT PLACE VALVE IN PROPOSED OR EXISTING CURB AND GUTTER. IF THE STREET IS SOIL AND NO PAVING IS TO BE DONE AT THIS TIME, THE LOCATION OF THE VALVE IS TO BE DETERMINED BY THE FAYPWC PROJECT COORDINATOR.

4. HYDRANT BRANCH SHALL NOT BE BACK FILLED UNTIL INSPECTED AND APPROVED BY FAYPWC PROJECT COORDINATOR.

5. GATE VALVE AND BOX SHALL BE IN ACCORDANCE WITH FAYPWC STANDARD DETAIL.

6. HYDRANT EXTENSIONS AND/OR OFFSETS SHALL BE APPROVED BY FAYPWC PROJECT COORDINATOR.

7. FIRE HYDRANT CONNECTIONS TO EXISTING WATER MAINS SHALL BE MADE USING A TAPPING SLEEVE AND VALVE BY WET TAP CONNECTION. THE TAPPING SLEEVE AND VALVE SHALL BE HYDROSTATICALLY TESTED PRIOR TO STARTING THE TAP IN THE PRESENCE OF THE FAYPWC PROJECT COORDINATOR.

8. THE PROPOSED LOCATION MAY BE RELOCATED BY THE FAYPWC PROJECT COORDINATOR IF CONFLICTS EXIST (IE: GAS SERVICES, UGE, TELEPHONE, ETC.).

9. THE CONTRACTOR SHALL FIELD VERIFY THE EXISTING WATER MAIN MATERIAL, SIZE, AND DEPTH FOR EACH FIRE HYDRANT LOCATION PRIOR TO ORDERING MATERIALS. THE CONTRACTOR WILL BE REQUIRED TO SUPPLY VARIOUS LENGTHS OF BARRELS AND HYDRANT EXTENSIONS (NO MORE THAN ONE HYDRANT EXTENSION MAY BE USED PER HYDRANT). ADDITIONAL FITTINGS AND/OR HYDRANT EXTENSIONS OR OFFSET CONNECTORS MAY BE REQUIRED TO MAINTAIN PROPER COVER AS APPROVED BY THE FAYPWC PROJECT COORDINATOR.

10. CONTRACTOR SHALL NOTIFY THE APPROPRIATE FIRE DEPARTMENT OF OUT OF SERVICE FIRE HYDRANTS PRIOR TO CONSTRUCTION.

11. FIRE HYDRANT SHALL BE FIELD PAINTED IN ACCORDANCE WITH FAYPWC STANDARDS, BEFORE PROJECT IS ACCEPTED. HYDRANTS SHALL BE PAINTED WITH A GREEN BONNET AND YELLOW BODY. PAINT SHALL BE IN ACCORDANCE WITH FAYPWC REQUIREMENTS. THE CONTRACTOR SHALL PAINT ALL EXPOSED EXTERIOR FIRE HYDRANT SURFACES PRIOR TO FINAL ACCEPTANCE BY FAYPWC. ALL PAINTING SHALL BE DONE IN STRICT ACCORDANCE WITH THE PAINT MANUFACTURER'S RECOMMENDATIONS AND SHALL BE SATISFACTORY TO THE FAYPWC.

12. PROTECTIVE COVERING SHALL BE UTILIZED, AS NECESSARY FOR PROTECTION OF ADJACENT AREAS, EQUIPMENT, SHRUBBERY, OR OTHER ITEMS. AFTER PAINTING IS COMPLETE, THE ENTIRE AREA SHALL BE THOROUGHLY CLEANED UP.

13. ALL PAINT MATERIALS SHALL BE IN THE ORIGINAL SEALED CONTAINERS BEARING THE MANUFACTURER'S NAME.

14. WHERE NECESSARY, THINNING SHALL BE DONE IN ACCORDANCE WITH THE MANUFACTURER'S INSTRUCTIONS, AND AS APPROVED BY FAYPWC.

15. ALL SURFACES TO BE PAINTED SHALL BE CLEAN AND DRY.

16. THE BONNET OF THE FIRE HYDRANT SHALL BE PAINTED A DARK GREEN, UTILIZING AN OIL BASE GLOSS, WITH A FINAL DRY MIL THICKNESS OF 4 TO 6 MILS. MULTIPLE COATS MAY BE NECESSARY TO ACHIEVE THE FINAL REQUIRED DRY MIL THICKNESS. THE PAINT SHALL BE FOREST GREEN, AS MANUFACTURED BY THE SHERWIN-WILLIAMS COMPANY, PART NUMBER A11T204 BASE AND SW7458 FOREST GREEN. PAINT SHOULD BE MIXED AT THE STORE. SAMPLES SHALL BE SUBMITTED IN ORDER FOR FAYPWC TO CONSIDER ALTERNATIVE PAINT MANUFACTURERS.

17. THE REMAINDER OF THE FIRE HYDRANT SHALL BE PAINTED SAFETY YELLOW, UTILIZING AN OIL BASE GLOSS, WITH A FINAL DRY MIL THICKNESS OF 4 TO 6 MILS. MULTIPLE COATS MAY BE NECESSARY TO ACHIEVE THE FINAL REQUIRED DRY MIL THICKNESS. THE PAINT SHALL BE SAFETY YELLOW, AS MANUFACTURED BY THE SHERWIN-WILLIAMS COMPANY, PART NUMBER B54Y37 BASE AND 617-4072 SAFETY YELLOW. PAINT SHOULD BE MIXED AT THE STORE. SAMPLES SHALL BE SUBMITTED IN ORDER FOR FAYPWC TO CONSIDER ALTERNATE PAINT MANUFACTURERS.

FIRE HYDRANT AND VALVE INSTALLATION N.T.S.			FAYETTEVILLE PUBLIC WORKS COMMISSION FAYETTEVILLE, N.C.	PWC	NO.	DATE	REVISION
SHEET NO. 2 OF 2	DWG. NO. W.13	DWG. BY: FAYPWC	WATER RESOURCES ENGINEERING DEPARTMENT		1	08/25/23	REVISED NOTES 16 AND 17
	DATE: JAN. 01, 2025	APPROVED BY: K.A.H.			2	07/01/09	REVISED NOTE NO. 2, REMOVED NOTE NO. 3 AND ALTERED RESTRAINT DETAIL
					3	07/01/16	REVISED NOTES

W13-FHCC.dwg

NOTES:

1. ALL MATERIAL SHALL BE APPROVED BY FAYPWC.
2. WHEN INSTALLED IN A PAVED AREA METER BOX SHALL BE SET 1/4" ABOVE FINISHED PAVEMENT GRADE AND PAVEMENT FEATHERED TO TOP OF BOX. COMPOSITE METER BOX (FAYPWC DETAIL W.4B) SHALL BE USED IN PAVED AREAS.
3. METER BOX SHALL BE IN ACCORDANCE WITH FAYPWC DETAILS. PROVIDE SOLID METER BOX LID.
4. BLOW-OFF ASSEMBLY NOT TO BE RE-USED UNLESS APPROVED BY FAYPWC.
5. REMOVE ENTIRE ASSEMBLY FROM BELL OF WATER MAIN PIPE WHEN EXTENDING THE MAIN.
6. CENTER 2" SDR-21 PIPE IN METER BOX.
7. INSTALLATION SHALL BE INSPECTED AND APPROVED BY FAYPWC PROJECT COORDINATOR PRIOR TO BACKFILL.
8. CONTRACTOR SHALL INSTALL TRACING WIRE INTO THE BOX. A MINIMUM OF 2' OF WIRE SHALL BE IN BOX.
9. VALVE BOX TO BE INSTALLED IN ACCORDANCE WITH FAYPWC DETAIL W.7.

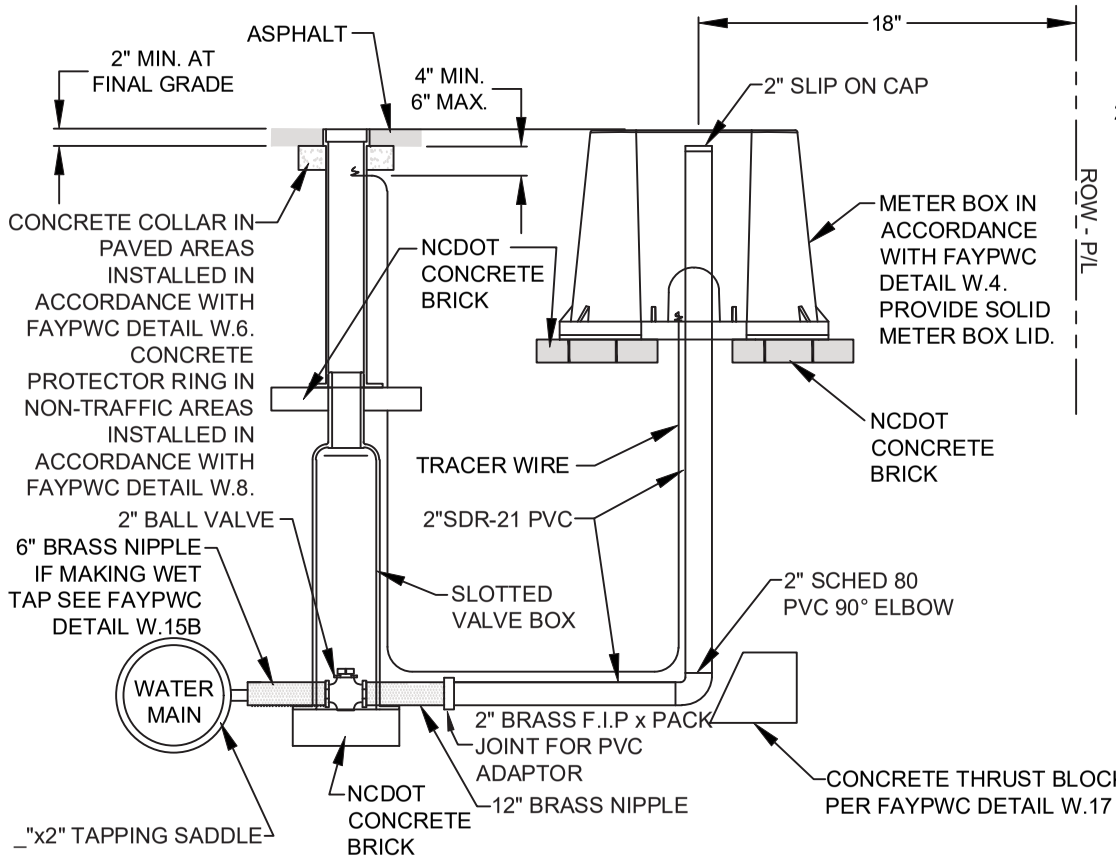

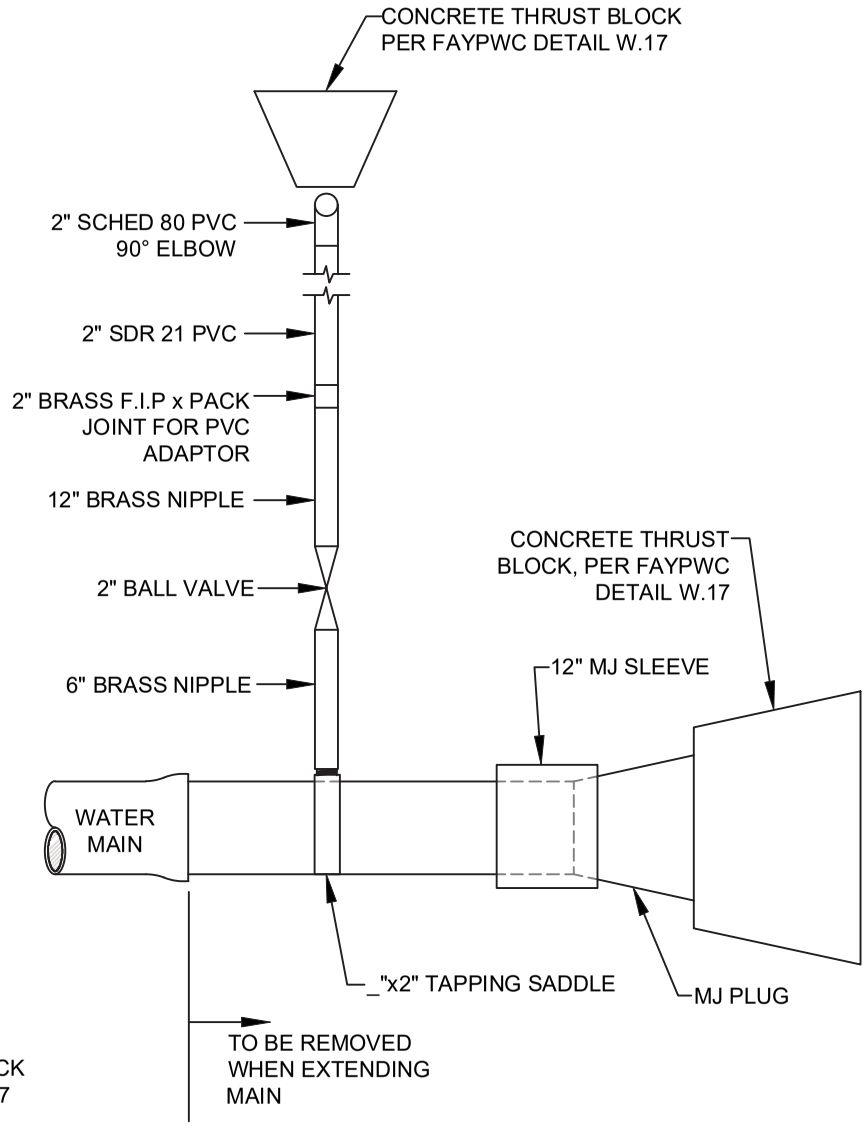

2" BLOW OFF N.T.S.			FAYETTEVILLE PUBLIC WORKS COMMISSION FAYETTEVILLE, N.C.	PWC	NO.	DATE	REVISION
					1	08/06	CHANGED FITTINGS TO SCHED 80
SHEET NO. 1 OF 1	DWG. NO. W.15	DWG. BY: FAYPWC	WATER RESOURCES ENGINEERING DEPARTMENT		2	11/06	REVISED CONFIGURATION
	DATE: JAN. 01, 2025	APPROVED BY: K.A.H.			3	07/17	REVISED NOTES

W15-2-BLOWOFF.dwg

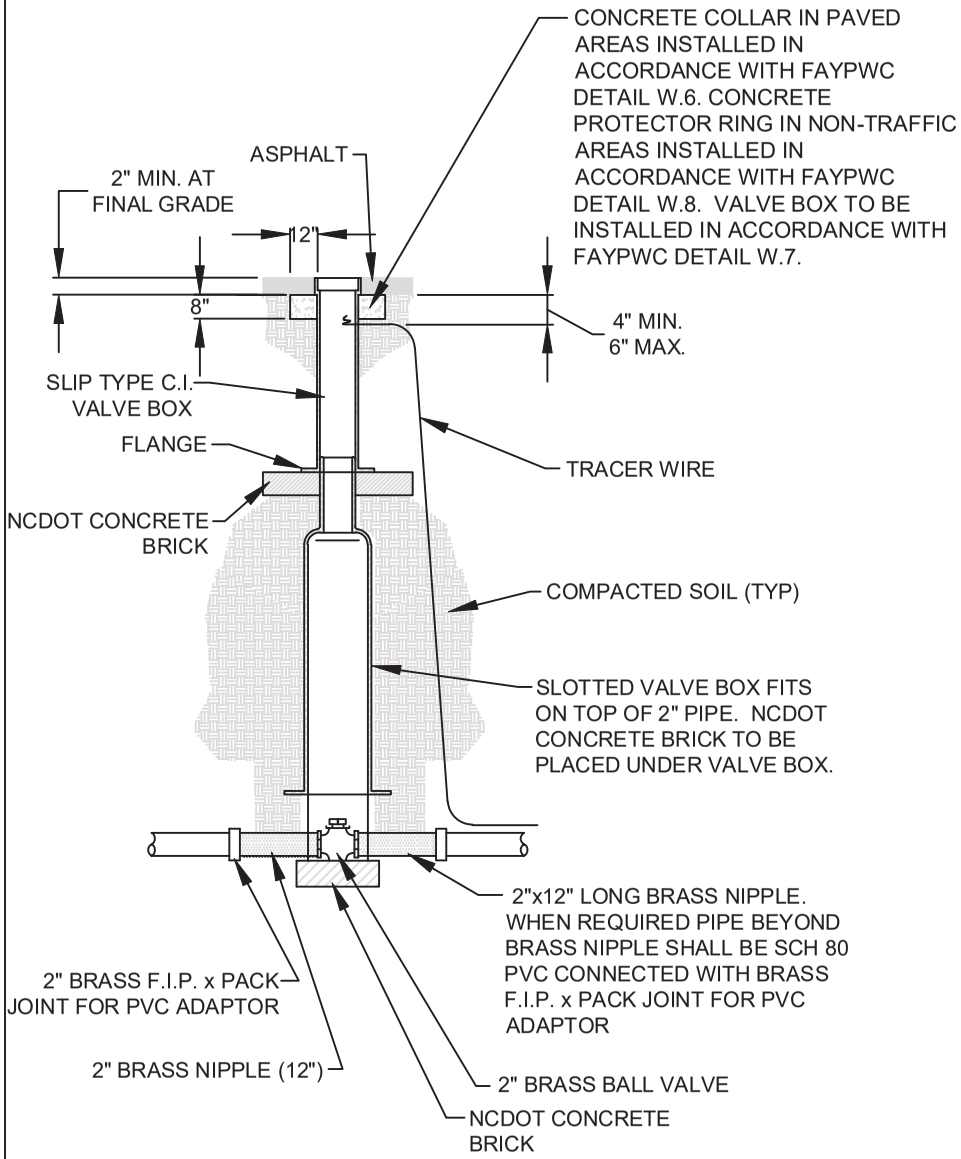

2" MAIN LINE VALVE

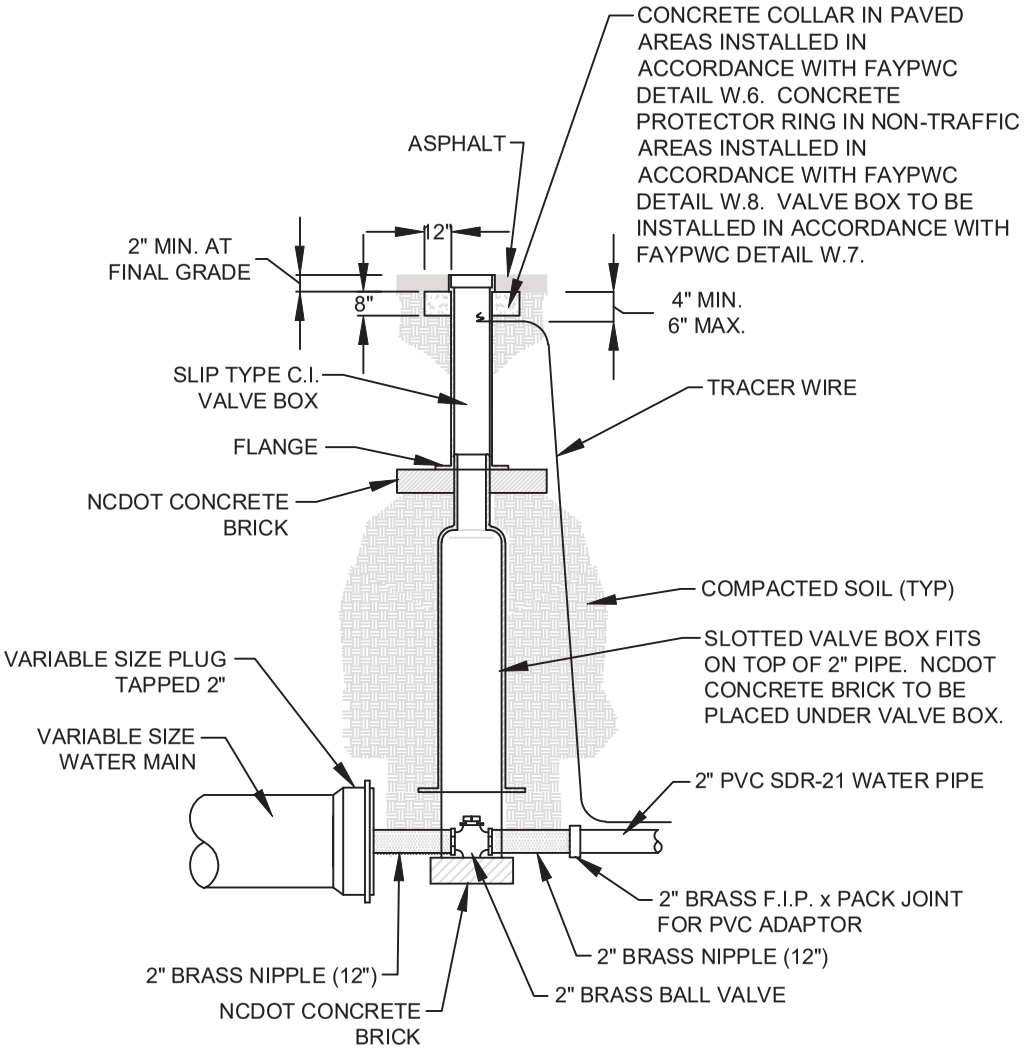

VARIABLE SIZE MAIN LINE TAPPED 2"

2" VALVE INSTALLATION N.T.S.			FAYETTEVILLE PUBLIC WORKS COMMISSION FAYETTEVILLE, N.C.		NO.	DATE	REVISION
					1	06/06	ADDED NOTE ON CONCRETE COLLAR
SHEET NO. 1 OF 1	DWG. NO. W.15A	DWG. BY: FAYPWC	WATER RESOURCES ENGINEERING DEPARTMENT		2	07/17	UPDATED NOTES
	DATE: JAN. 01, 2025	APPROVED BY: K.AH.					

W15A-2-VALVE-INSTALLATION.dwg

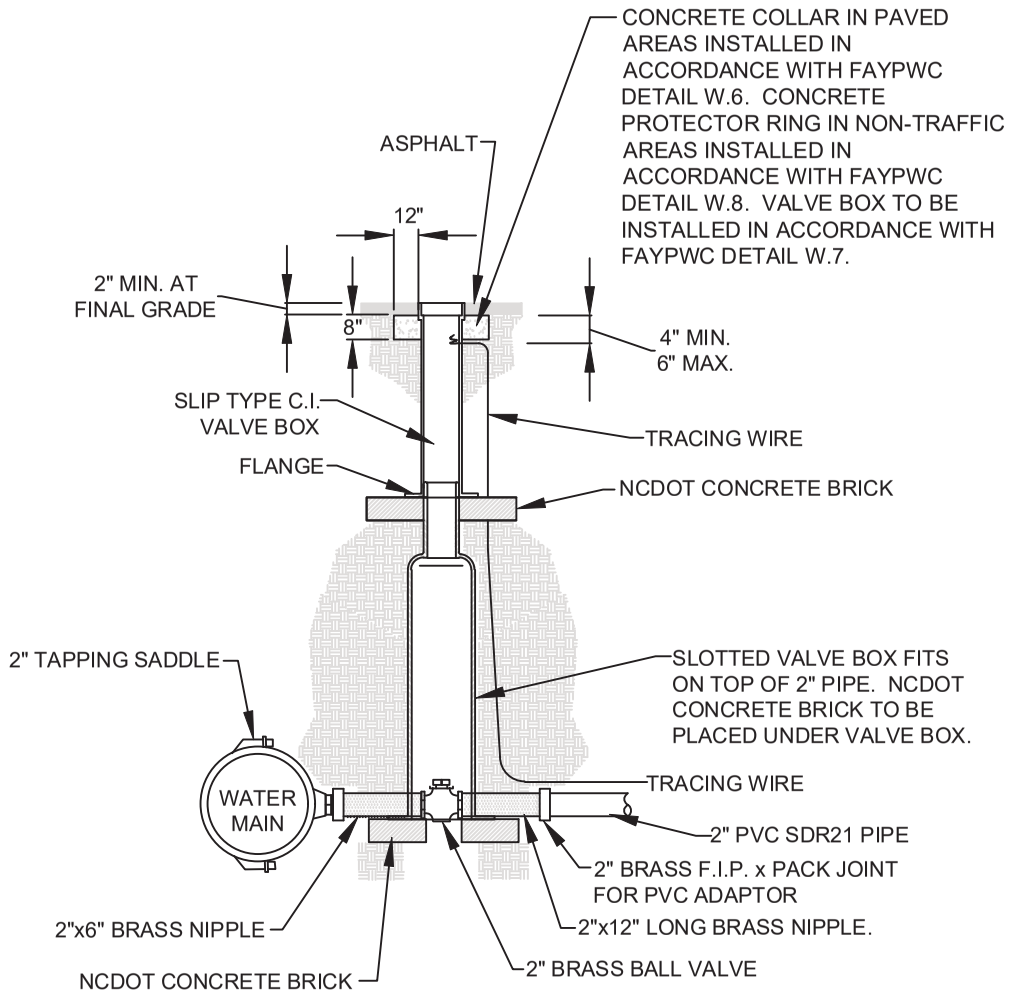

VARIABLE SIZE MAIN LINE WITH 2" TAPPING SADDLE AND BALL VALVE

2" WET TAP N.T.S.			FAYETTEVILLE PUBLIC WORKS COMMISSION FAYETTEVILLE, N.C.		NO.	DATE	REVISION
					1	06/06	ADDED NOTE ON CONCRETE COLLAR
SHEET NO. 1 OF 1	DWG. NO. W.15B	DWG. BY: FAYPWC	WATER RESOURCES ENGINEERING DEPARTMENT		2	01/07	REVISED VALVE LOCATION
	DATE: JAN. 01, 2025	APPROVED BY: K.A.H.			3	07/17	REVISED NOTES

W15B-2-WET-TAP.dwg

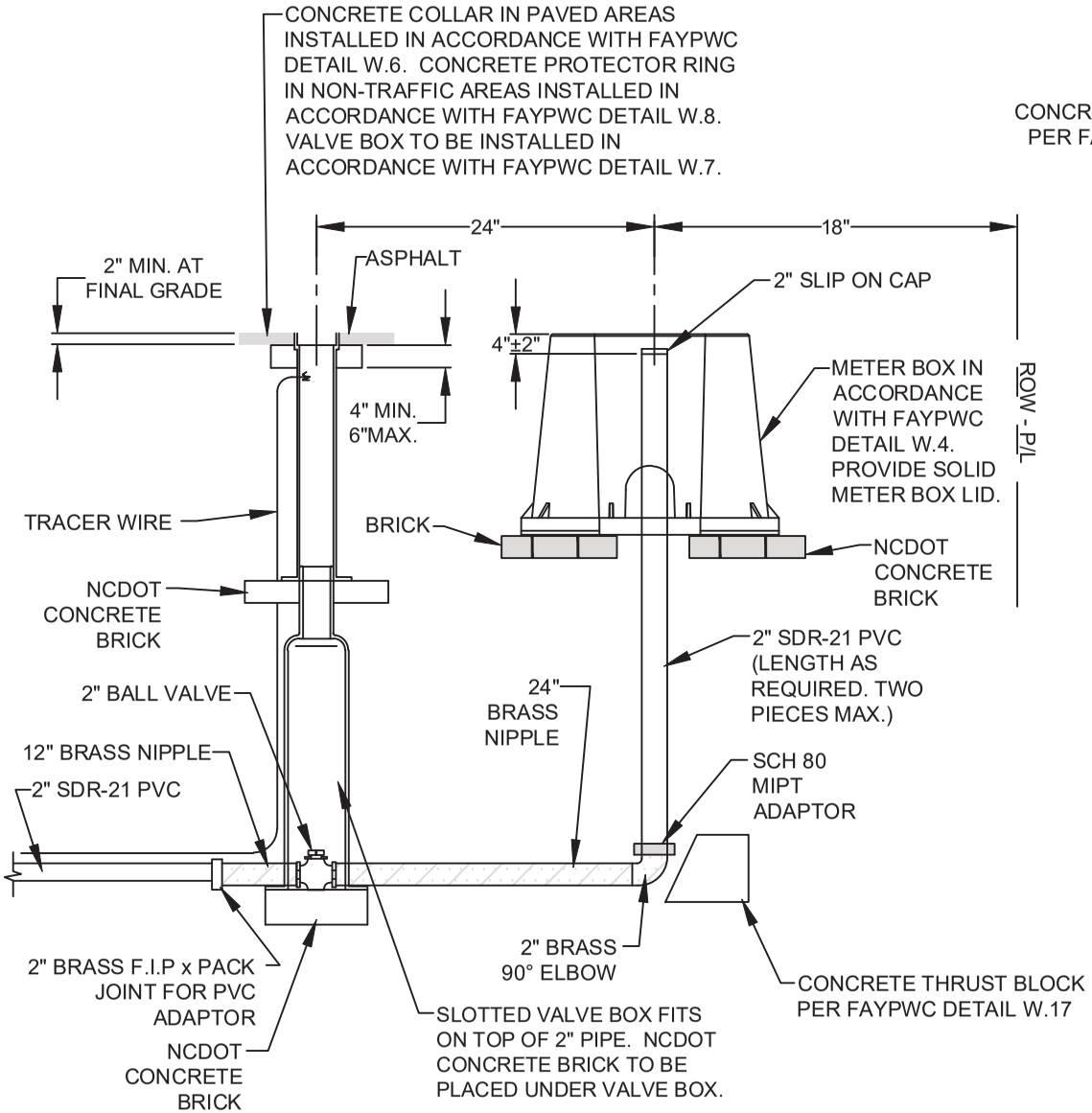

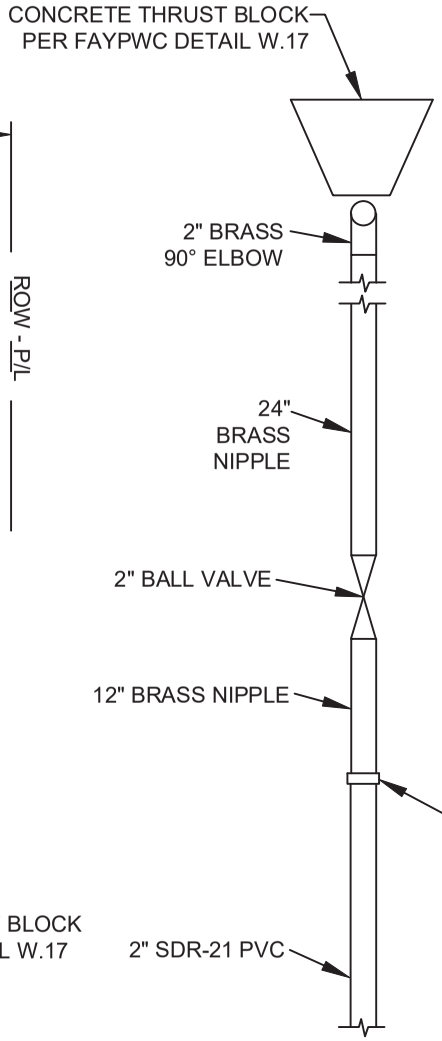

NOTES:

1. ALL MATERIALS SHALL BE APPROVED BY FAYPWC.
2. WHEN INSTALLED IN A PAVED AREA METER BOX SHALL BE SET 1/4" ABOVE FINISHED PAVEMENT GRADE AND PAVEMENT FEATHERED TO TOP OF BOX. COMPOSITE METER BOX (FAYPWC DETAIL W.4B) SHALL BE USED IN PAVED AREAS.
3. METER BOX SHALL BE IN ACCORDANCE WITH FAYPWC DETAILS. PROVIDE SOLID METER BOX LID.
4. VALVE FOR BLOW-OFF TO BE INSTALLED AFTER LAST SERVICE.
5. CENTER 2" SDR-21 PIPE IN METER BOX.
6. BLOW-OFF ASSEMBLY NOT TO BE RE-USED UNLESS APPROVED BY FAYPWC.
7. INSTALLATION SHALL BE INSPECTED AND APPROVED BY THE FAYPWC PROJECT COORDINATOR PRIOR TO BACKFILL.

2" BLOW OFF ON 2" WATER MAIN N.T.S.			FAYETTEVILLE PUBLIC WORKS COMMISSION FAYETTEVILLE, N.C.		NO.	DATE	REVISION
					1	07/17	REVISED NOTES
SHEET NO. 1 OF 1	DWG. NO. W.15C	DWG. BY: FAYPWC	WATER RESOURCES ENGINEERING DEPARTMENT				
	DATE: JAN. 01, 2025	APPROVED BY: K.A.H.					

W15C-2-BLOWOFF.dwg

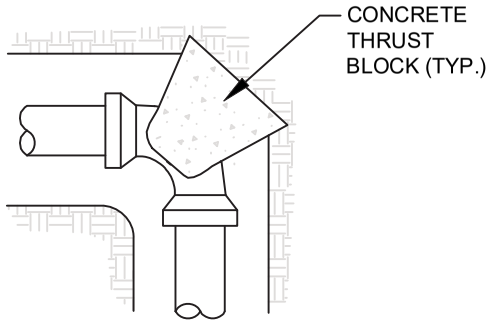

ELBOW

MINIMUM BEARING AREA EACH DIRECTION OF THRUST IN SQUARE FEET (based on soil supporting value of 2,000psf @ 200 psig test pressure)				
PIPE SIZE	TEES & DEADENDS	90° ELBOWS	45° ELBOW & CROSSES	22-1/2° ELBOWS
6"	4	6	3	2
8"	7	10	5	3
12"	15	21	11	6

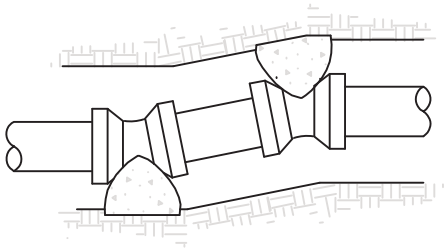

HORIZONTAL BEND

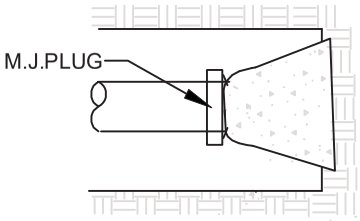

SEE BLOW-OFF DETAIL FOR CLARIFICATION OF CONSTRUCTION REQUIRED AT DEAD ENDS.

DEAD END

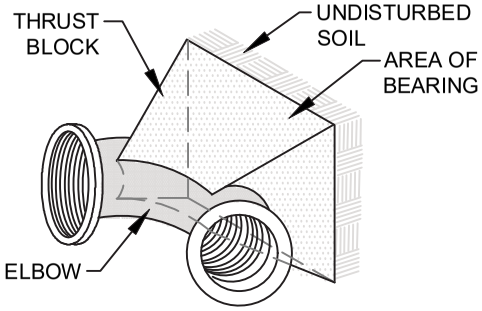

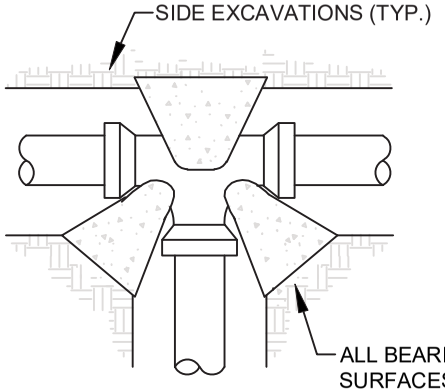

TEE

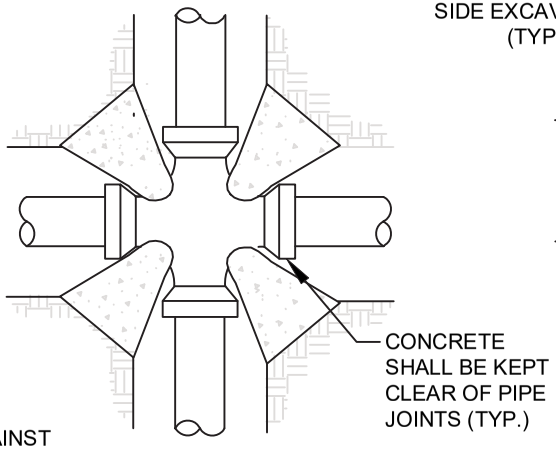

CROSS

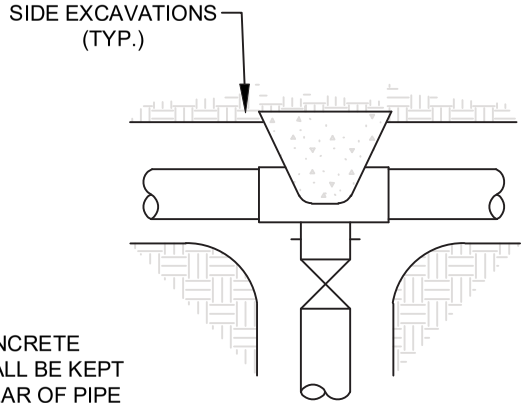

TAPPING SLEEVE AND VALVE

NOTES:

1. THRUST BLOCKS SHALL BE INSTALLED ON PVC WATER DISTRIBUTION LINES 6" THRU 12" DIAMETER IN THE MANNER SHOWN. SEE FAYPWC STANDARD ALTERNATE RESTRAINING DETAIL W.18 FOR ACCEPTABLE ALTERNATE RESTRAINING SYSTEMS.
2. PIPE GREATER THAN 12 INCH DIAMETER SHALL REQUIRE RESTRAINT JOINT PIPE FOR THE PROPER LENGTH.
3. COMPACT FITTINGS ARE NOT ACCEPTABLE. STANDARD FITTINGS SHALL BE USED WITH CONCRETE THRUST BLOCKING.
4. THRUST BLOCKS SHALL BE INSTALLED ON SEWER FORCE MAIN IN THE MANNER SHOWN.
5. IF SAC-CRETE IS USED, MIXING MUST BE ON SITE UTILIZING A MECHANICAL MIXER.
6. NO CONCRETE SHALL BE PLACED ON BOLTS. WRAP JOINT FITTINGS WITH PLASTIC.
7. CONCRETE SHALL BE A MINIMUM 3,000PSI.
8. ALL BEARING SURFACES SHALL BE AGAINST UNDISTURBED SOIL AND SHALL BE APPROVED BY FAYPWC PROJECT COORDINATOR PRIOR TO PLACEMENT OF CONCRETE.
9. USE OF RESTRAINED JOINT DUCTILE IRON WILL BE REQUIRED IF SOIL CONDITIONS DO NOT ALLOW THE USE OF THRUST BLOCKS.
10. ALL VERTICAL BENDS SHALL BE RESTRAINED USING RESTRAINED JOINT DUCTILE IRON PIPE.

CONCRETE THRUST BLOCK DETAIL N.T.S.			FAYETTEVILLE PUBLIC WORKS COMMISSION FAYETTEVILLE, N.C.		NO.	DATE	REVISION
					1	09/05	REVISED TABLE
SHEET NO. 1 OF 1	DWG. NO. W.17	DWG. BY: FAYPWC	WATER RESOURCES ENGINEERING DEPARTMENT		2	02/07	ADDED NOTES 9 AND 10
	DATE: JAN. 01, 2025	APPROVED BY: K.A.H.			3	07/13	ADDED TAPPING SLEEVE AND VALVE DETAIL

W17-THRUSTBLOCK.dwg

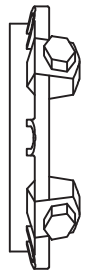

SIDE VIEW

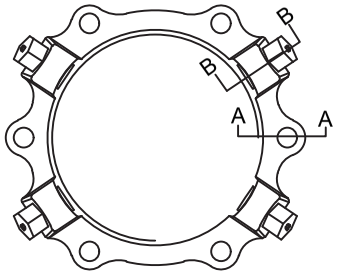

FRONT VIEW

SECTION "B-B"

SECTION "A-A"

IRON RETAINING GLAND M.J. RESTRAINT			
NOMINAL PIPE SIZE	WEDGES QUANTITY	BOLTS QUANTITY	PRESS RATING
6"	3	6	350
8"	4	6	350
12"	8	8	350

8" SIZE SHOWN 6" AND 12" SIMILAR
IRON RETAINING GLAND M.J.
RESTRAINT

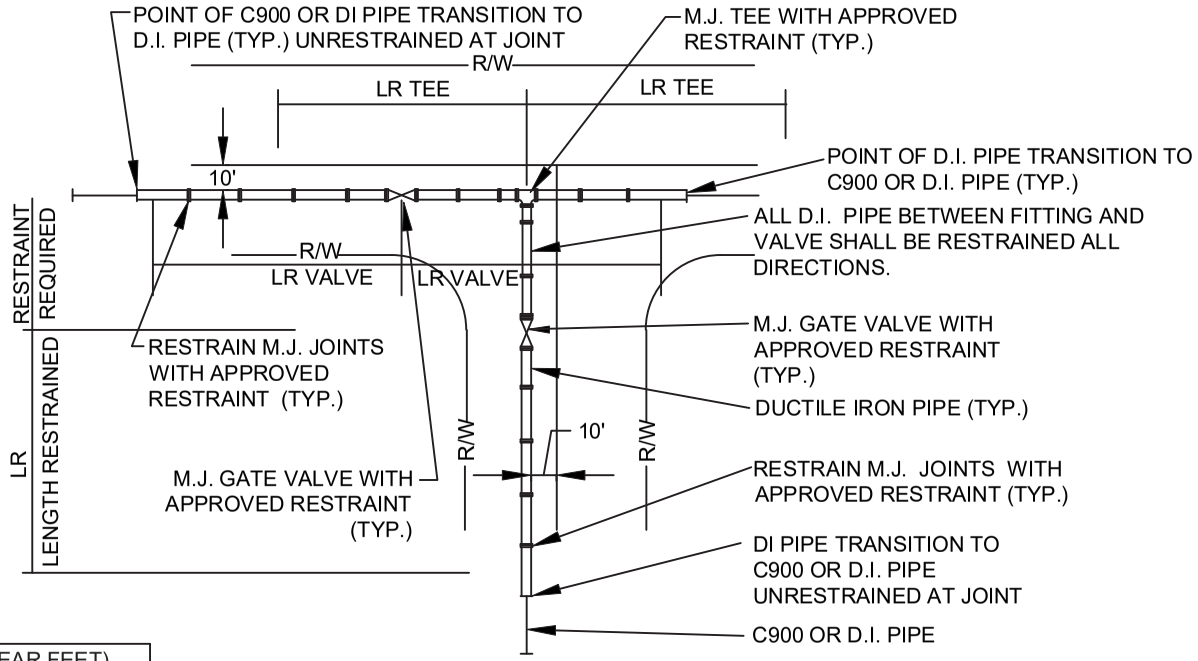

RESTRAINED JOINT DETAIL FOR TYPICAL TEE INTERSECTION
4-WAY INTERSECTION SIMILARLY RESTRAINED

LR (MIN. LENGTH OF RESTRAINT EACH DIRECTION OF THRUST IN LINEAR FEET) Based on 200 psig pressure, Safety Factor of 2.0:1, BARE DI PIPE AND ML Soil, 3.5' cover Chart does not apply to pipes wrapped in polyethylene wrap					
PIPE SIZE	VALVES DEAD ENDS TEES	90° ELBOWS	45° ELBOW & CROSSES	22-1/2° ELBOWS	REDUCER
6"	55'	31'	13'	7'	8"x2" 67'
8"	72'	40'	17'	8'	8"x6" 30'
12"	102'	57'	24'	12'	12"x8" 54'

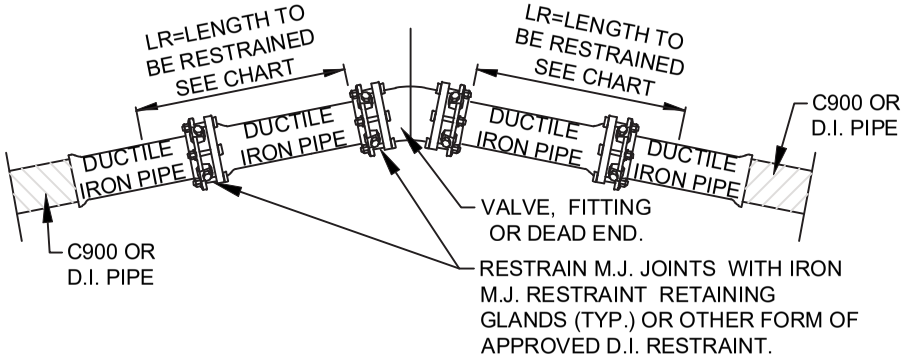

NOTES:

1. THRUST RESTRAINT SHALL BE INSTALLED ON DUCTILE IRON WATER DISTRIBUTION LINES 6" THRU 12" DIAMETER IN THE MANNER SHOWN. SEE FAYPWC STANDARD THRUST BLOCK DETAIL W.17 FOR PVC RESTRAINT.
2. IRON RETAINING GLAND M.J. RESTRAINT OR OTHER FORMS OF IRON RESTRAINT SHALL NOT BE USED ON PVC PIPE.
3. PIPE GREATER THAN 12 INCH DIAMETER SHALL REQUIRE RESTRAINED JOINT PIPE FOR THE PROPER LENGTH.
4. COMPACT FITTINGS ARE ACCEPTABLE FOR USE WITH IRON RETAINING GLAND M.J. RESTRAINT AND OTHER FORMS OF D.I. RESTRAINT.
5. THE MINIMUM LENGTH OF RESTRAINT INDICATED SHALL REQUIRE ALL JOINTS WITHIN THE LR DISTANCE TO BE RESTRAINED.
6. RESTRAINT SYSTEM SHALL BE INSPECTED AND APPROVED BY FAYPWC PRIOR TO BACKFILLING.
7. RESTRAINT SYSTEMS MAY VARY BASED UPON THE ENGINEERS' DESIGN AS SHOWN ON THE PLAN AND PROFILE SHEETS.
8. GRIPPER RING AND FIELD LOK GASKETS ARE AN ACCEPTABLE METHOD OF RESTRAINT ON DUCTILE IRON PIPE ONLY.

ALTERNATE RESTRAINT DETAIL (DUCTILE IRON PIPE ONLY) N.T.S.			FAYETTEVILLE PUBLIC WORKS COMMISSION FAYETTEVILLE, N.C.		NO.	DATE	REVISION
					1	11/16/07	REVISED TABLE, ADDED NOTE 8
SHEET NO. 1 OF 1	DWG. NO. W.18	DWG. BY: FAYPWC	WATER RESOURCES ENGINEERING DEPARTMENT				
	DATE: JAN. 01, 2025	APPROVED BY: K.A.H.					

W18-RESTRAINT-DETAIL.dwg

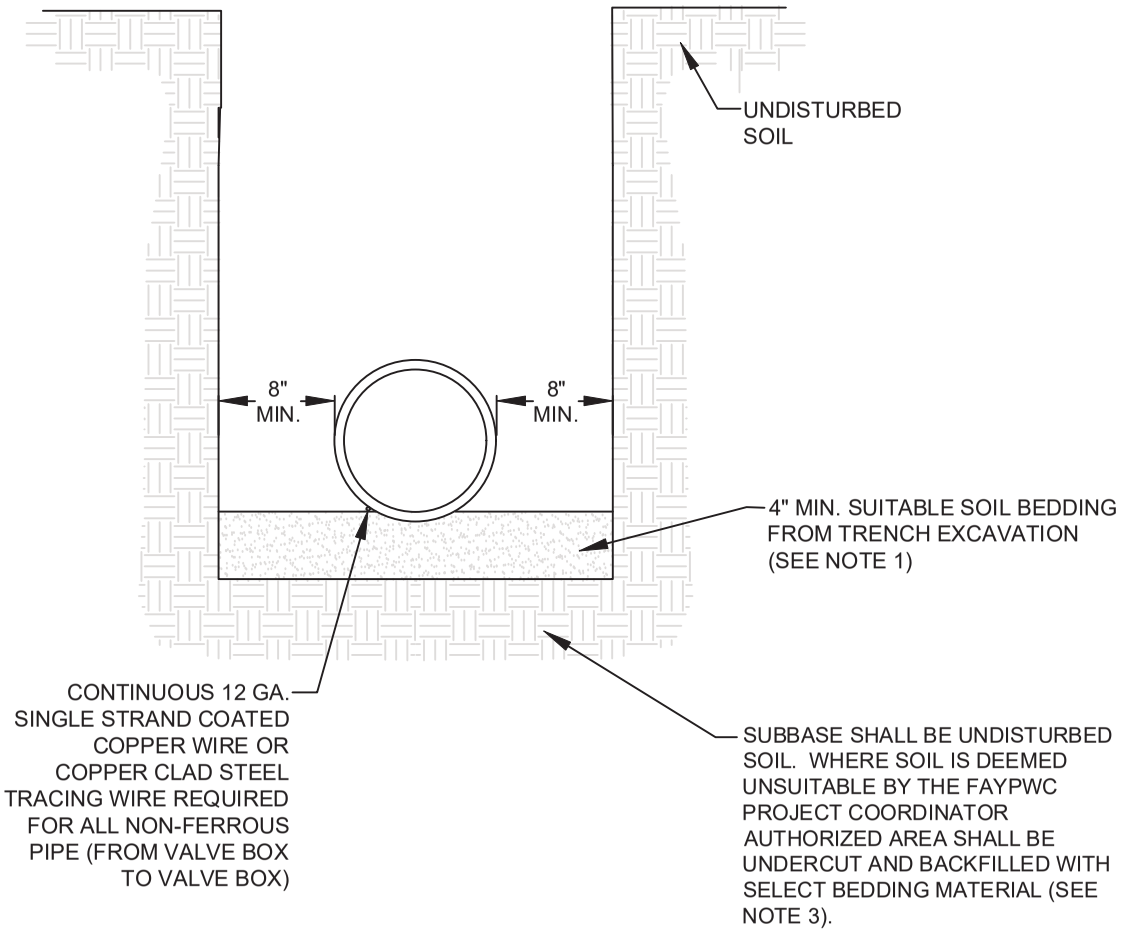

NOTES:

1. SUITABLE SOIL BEDDING IS DEFINED AS "NATIVE" SOIL EXCAVATED FROM THE TRENCH, FREE OF ROCKS, FOREIGN MATERIAL, AND FROZEN EARTH.

2. SUITABLE BEDDING MATERIAL SHALL EXTEND TO UNDISTURBED TRENCH WALLS.

3. IF GROUND CONDITIONS WARRANT, IT MAY BE NECESSARY TO BED DUCTILE IRON WATER MAINS IN SELECT BEDDING MATERIAL (NO. 5 OR NO. 57 STONE) TO THE SPRINGLINE OF THE PIPE. SUCH INSTALLATION SHALL BE AS DIRECTED BY THE FAYPWC PROJECT COORDINATOR.

WATER MAIN BEDDING DETAIL N.T.S.			FAYETTEVILLE PUBLIC WORKS COMMISSION FAYETTEVILLE, N.C.		NO.	DATE	REVISION
					1	01/01/17	REVISED NOTES
SHEET NO. 1 OF 1	DWG. NO. W.19	DWG. BY: FAYPWC	WATER RESOURCES ENGINEERING DEPARTMENT		2	07/01/13	REVISED NOTE RE: TRACER WIRE
	DATE: JAN. 01, 2025	APPROVED BY: K.A.H.					

W19-WATER-BEDDING.dwg

NOTES:

1. KILL OUT SHALL BE DONE A MINIMUM OF 5 FEET FROM ANY FITTING ON THE EXISTING WATER MAIN THAT IS TO REMAIN IN SERVICE.
2. IRON PIPE SHALL BE 4" DIAMETER FOR MAINS 12" OR LESS. UTILIZE 8" PIPE OR LARGER AS DIRECTED BY THE FAYPWC PROJECT COORDINATOR FOR ALL MAINS LARGER THAN 12".
3. ALLOW CONCRETE TO SET-UP PRIOR TO PLACING BACKFILL.
4. VOLUME OF CONCRETE FOR THRUST BLOCK SHALL BE IN ACCORDANCE WITH FAYPWC STANDARD DETAIL W.17.
5. ALL OUTAGES SHALL BE COORDINATED WITH THE FAYPWC PROJECT COORDINATOR.
6. PIPE SHALL BE GROUT FILLED OR REMOVED IN ACCORDANCE WITH NCDOT SPECIFICATIONS WHEN LOCATED IN THE STATE RIGHT-OF-WAY. ALL OTHER INSTANCES SHALL BE IN ACCORDANCE WITH FAYPWC SPECIFICATIONS.

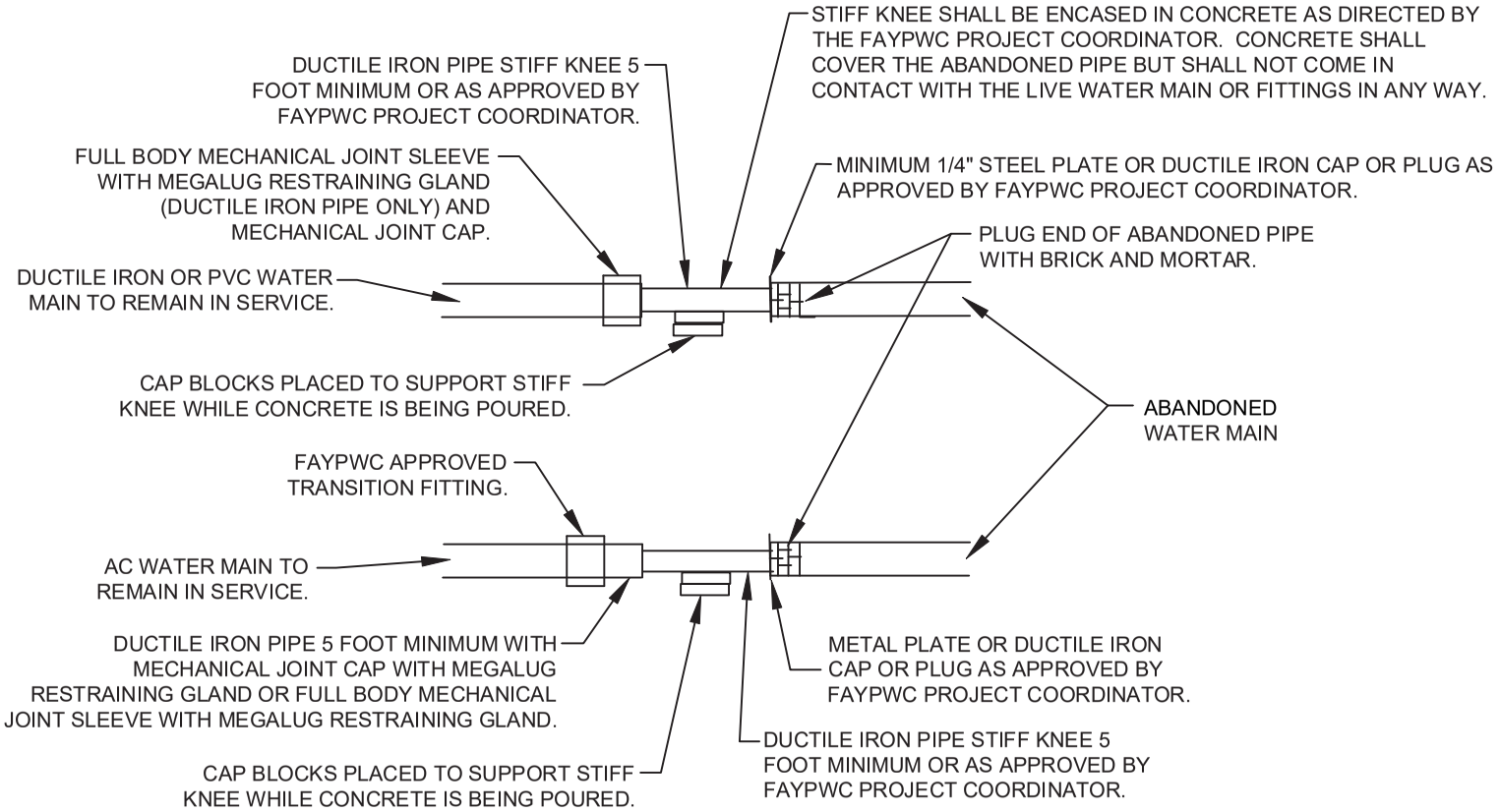

WATER MAIN KILL-OUT N.T.S.			FAYETTEVILLE PUBLIC WORKS COMMISSION FAYETTEVILLE, N.C.	PWC	NO.	DATE	REVISION
SHEET NO. 1 OF 1	DWG. NO. W.22	DWG. BY: FAYPWC	WATER RESOURCES ENGINEERING DEPARTMENT				
	DATE: JAN. 01, 2025	APPROVED BY: K.A.H.					

W22-WATERMAIN-KILLOUT.dwg

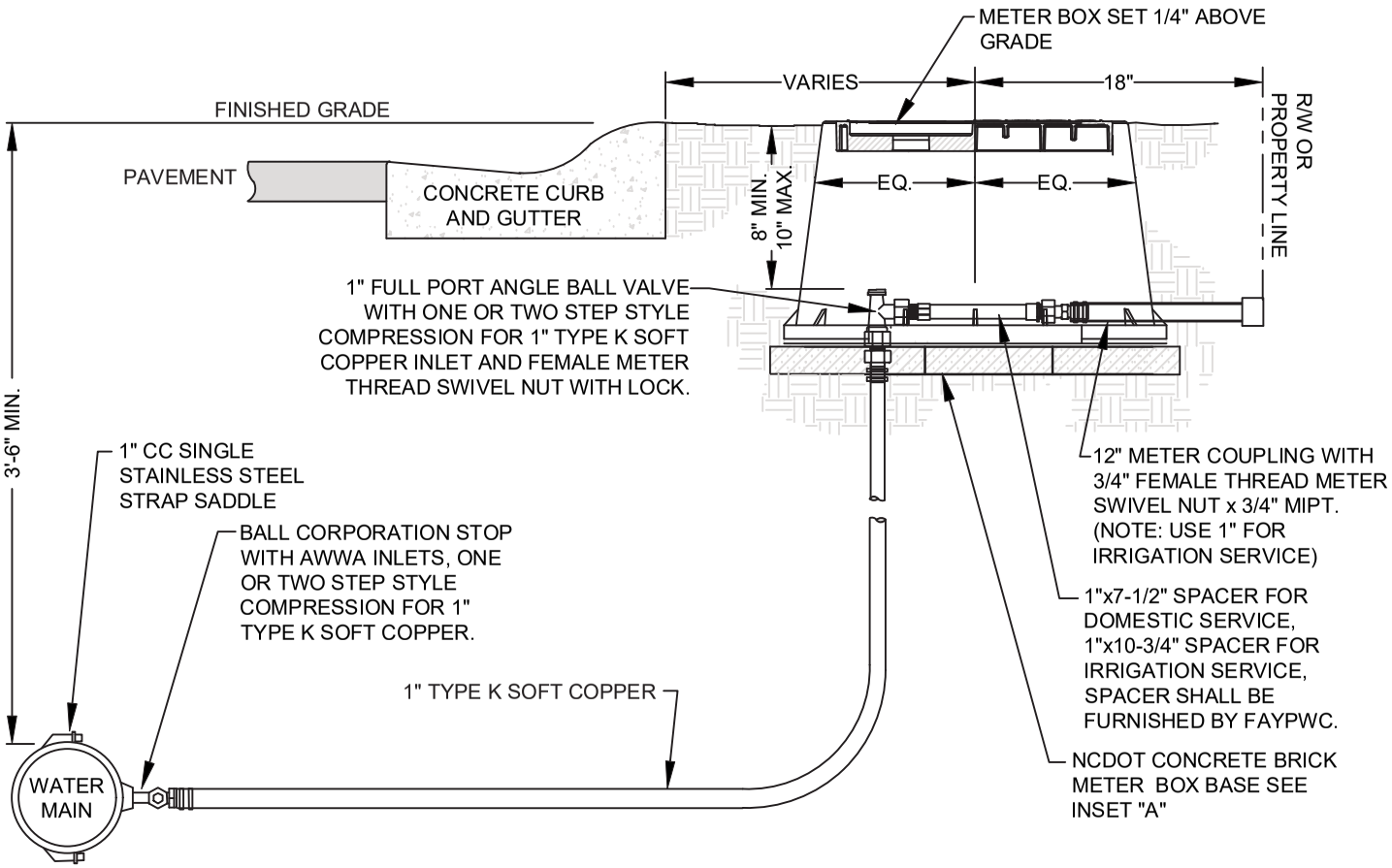

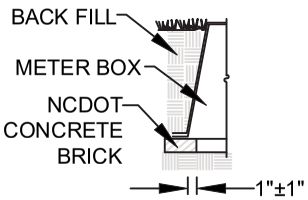

SECTION "A-A"

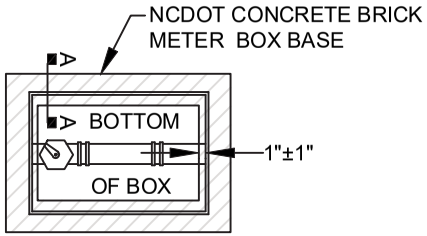

BRICK METER BOX BASE

INSET "A"

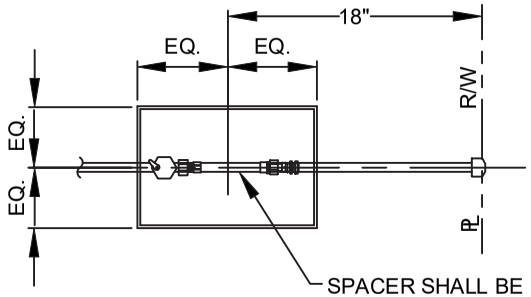

PLAN

NOTES:

1. ALL MATERIALS TO BE APPROVED BY FAYPWC.
2. SERVICE LATERAL SIZE 1" TYPE K SOFT COPPER UNLESS OTHERWISE SPECIFIED.
3. WATER SERVICE LOCK VALVE TO BE LOCATED 18" FROM SANITARY SEWER CLEAN-OUT STACK WHEN INSTALLED IN SAME DITCH.
4. WHEN INSTALLED IN A PAVED AREA, METER BOX TO BE SET 1/4" ABOVE FINISHED PAVEMENT GRADES AND PAVEMENT FEATHERED TO TOP OF BOX TO PROVIDE DRAIN AWAY FROM BOX.
5. COMPOSITE METER BOXES SHALL BE USED IN TRAFFIC AREAS SEE FAYPWC DETAIL W.4B.
6. INSTALL NCDOT CONCRETE BRICK BASE WITH NO GAPS, DO NOT LAY BRICK ON PIPE. SEE INSET "A".
7. WHERE ASPHALT CURB OR STRIP PAVEMENT EXISTS, THE LOCATION OF BOX SHALL BE AS DIRECTED BY FAYPWC REPRESENTATIVE.
8. DISTANCE FROM TOP OF LOCK VALVE OPERATING STEM TO TOP OF BOX SHALL BE 8" MINIMUM TO 10" MAXIMUM.
9. RESIDENTIAL METER BOX SHALL BE SET 18" FROM R/W TO CENTERLINE OF METER BOX PERPENDICULAR TO THE RIGHT-OF-WAY.
10. COMMERCIAL METER BOX LOCATION SHALL BE AS APPROVED (PREFER NO METER BE INSTALLED LESS THAN 5' FROM BUILDING TO EDGE OF BOX).
11. LATERAL SHALL BE CENTERED ON LOT UNLESS OTHERWISE NOTED.
12. LATERAL SHALL NOT BE BACKFILLED UNTIL INSPECTED AND APPROVED BY FAYPWC PROJECT COORDINATOR.
13. WATER MAIN AND LATERAL SHALL PASS HYDROSTATIC AND STERILIZATION TESTS.
14. SHOULD IT BE NECESSARY TO CRIMP THE WATER SERVICE LATERAL, A FULL CIRCLE REPAIR CLAMP SHALL BE PLACED ON THE CRIMPED AREA.

1" COPPER WATER SERVICE LATERAL N.T.S.			FAYETTEVILLE PUBLIC WORKS COMMISSION FAYETTEVILLE, N.C.		NO.	DATE	REVISION
					2	09/05	VALVE CHANGE, ADD NOTE 16
SHEET NO. 1 OF 1	DWG. NO. W.24	DWG. BY: FAYPWC	WATER RESOURCES ENGINEERING DEPARTMENT		3	07/06	RESIZED METER COUPLING
	DATE: JAN. 01, 2025	APPROVED BY: K.A.H.			4	07/17	RESIZED NOTES

W24-COPPER-SERVICE-LATERAL.dwg

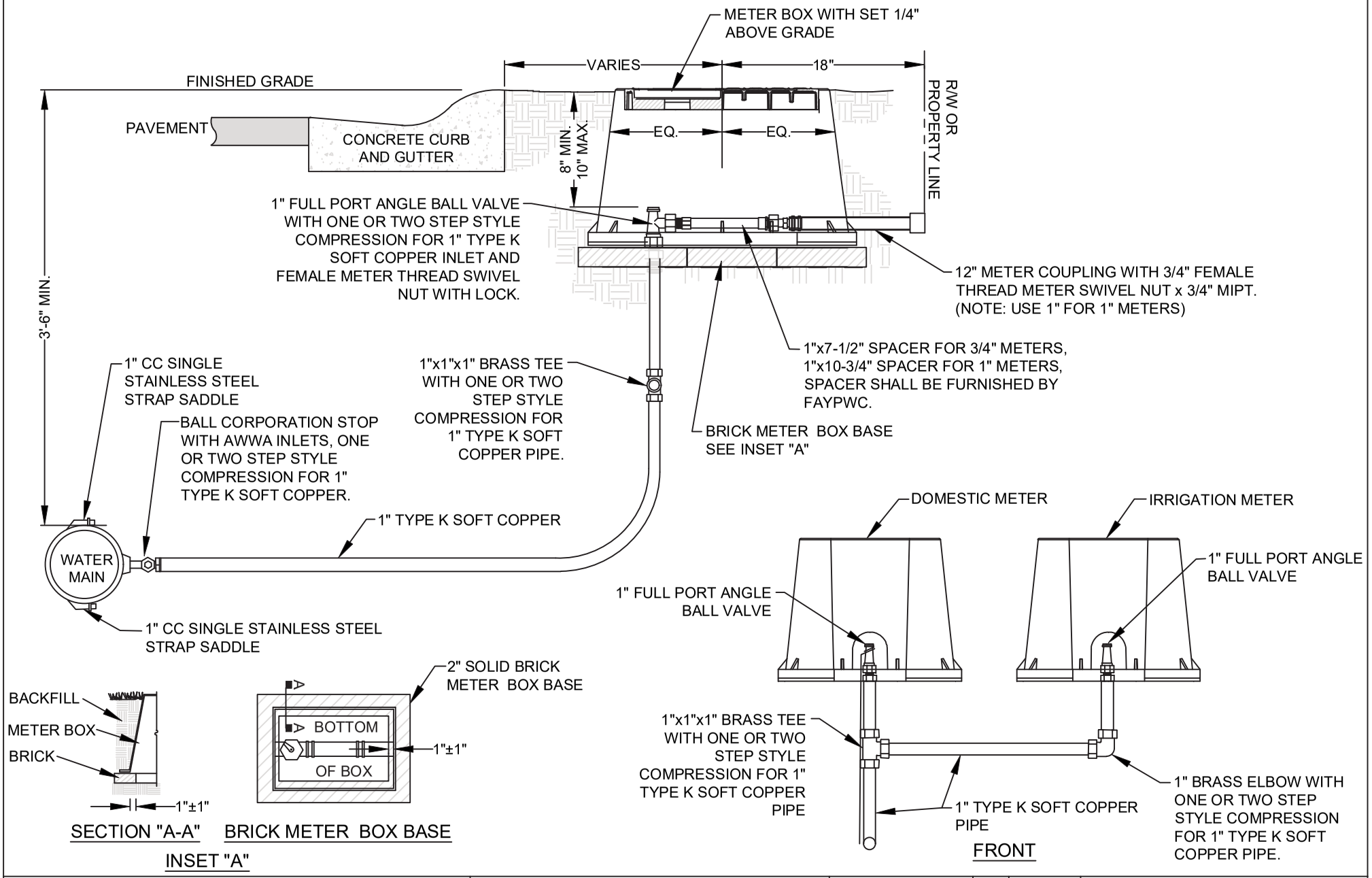

1" SPLIT WATER SERVICE LATERAL FOR TYPE K SOFT COPPER PIPE N.T.S.			FAYETTEVILLE PUBLIC WORKS COMMISSION FAYETTEVILLE, N.C.		NO.	DATE	REVISION
					1	05/05	VALVE CHANGE
SHEET NO. 1 OF 2	DWG. NO. W.25	DWG. BY: FAYPWC	WATER RESOURCES ENGINEERING DEPARTMENT		2	09/05	VALVE CHANGE, ADD NOTE 17
	DATE: JAN. 01, 2025	APPROVED BY: K.A.H.			3	07/06	ADDED FRONT VIEW AND MOVED NOTES TO SHEET 2

W25-COPPER-SPLIT-WLAT.dwg

NOTES:

1. ALL MATERIALS TO BE APPROVED BY FAYPWC.
2. SERVICE LATERAL SIZE 1" TYPE K SOFT COPPER PIPE UNLESS OTHERWISE SPECIFIED.
3. WATER SERVICE LOCK VALVE TO BE LOCATED 18" FROM SANITARY SEWER CLEANOUT STACK WHEN INSTALLED IN SAME DITCH
4. WHEN INSTALLED IN A PAVED AREA, METER BOX TO BE SET 1/4" ABOVE FINISHED PAVEMENT GRADES AND PAVEMENT FEATHERED TO TOP OF BOX TO PROVIDE DRAIN AWAY FROM BOX.
5. COMPOSITE METER BOXES SHALL BE USED IN TRAFFIC AREAS (SEE FAYPWC DETAIL W.4B)
6. INSTALL NCDOT CONCRETE BRICK BASE WITH NO GAPS, DO NOT LAY BRICK ON PIPE. SEE INSET "A".
7. WHERE ASPHALT CURB OR STRIP PAVEMENT EXIST, THE LOCATION OF BOX SHALL BE AS DIRECTED BY FAYPWC REPRESENTATIVE.
8. DISTANCE FROM TOP OF LOCK VALVE OPERATING STEM TO TOP OF BOX SHALL BE 8" MINIMUM TO 10" MAXIMUM.
9. RESIDENTIAL METER BOX SHALL BE SET 18" FROM RIGHT-OF-WAY TO CENTERLINE OF METER BOX PERPENDICULAR TO THE RIGHT-OF-WAY.
10. COMMERCIAL METER BOX LOCATION SHALL BE AS APPROVED (PREFER NO METER BE INSTALLED LESS THAN 5' FROM BUILDING TO EDGE OF BOX).
11. LATERAL SHALL BE CENTERED ON LOT UNLESS OTHERWISE NOTED.
12. LATERAL SHALL NOT BE BACKFILLED UNTIL INSPECTED AND APPROVED BY FAYPWC PROJECT COORDINATOR.
13. WATER MAIN AND LATERAL SHALL PASS HYDROSTATIC AND STERILIZATION TESTS.
14. SHOULD IT BE NECESSARY TO CRIMP THE WATER SERVICE LATERAL, A FULL CIRCLE REPAIR CLAMP SHALL BE PLACED ON THE CRIMPED AREA.

NOTES FOR 1" SPLIT WATER SERVICE LATERAL FOR TYPE K SOFT COPPER PIPE			FAYETTEVILLE PUBLIC WORKS COMMISSION FAYETTEVILLE, N.C.		NO.	DATE	REVISION
					1	07/06	ADDED FRONT VIEW AND MOVED NOTES TO SHEET 2
SHEET NO. 2 OF 2	DWG. NO. W.25	DWG. BY: FAYPWC	WATER RESOURCES ENGINEERING DEPARTMENT		2	07/17	REVISED NOTES
	DATE: JAN. 01, 2025	APPROVED BY: K.A.H.					

W25-COPPER-SPLIT-WLAT.dwg

NOTES:

1. ALL PIPE AND FITTINGS SHALL BE APPROVED BY FAYPWC.
2. CONTRACTOR TO COORDINATE NECESSARY OUTAGES WITH FAYPWC AND AFFECTED CUSTOMERS. MINIMUM 48 HOUR NOTICE REQUIRED.
3. NEW WATER MAIN TO BE SWABBED WITH A CHLORINE SOLUTION AND FLUSHED PRIOR TO PLACING INTO SERVICE.
4. ALL NEW FITTINGS AND PIPE TO BE RESTRAINED UTILIZING MEGA-LUGS, GRIP-RINGS OR APPROVED EQUAL.
5. ALL PIPE AND FITTINGS TO BE DUCTILE IRON.
6. FAYPWC PROJECT COORDINATOR TO BE PRESENT DURING WORK.
7. BACKFILL AND COMPACT TO CITY OF FAYETTEVILLE OR NCDOT REQUIREMENTS.
8. PROVIDE STONE BEDDING (NO. 5 OR NO. 57 STONE) TO SUPPORT RELOCATED WATER MAIN AND/OR NEW STORM DRAIN, AS APPROVED BY FAYPWC PROJECT COORDINATOR.
9. MJ RESTRAINTS NOT ALLOWED ON PVC PIPE.
10. DIMENSIONS ARE GIVEN AS GENERAL GUIDANCE, EXACT DIMENSIONS ARE SUBJECT TO CHANGE BASED ON FIELD CONDITIONS AND AS DIRECTED BY FAYPWC.

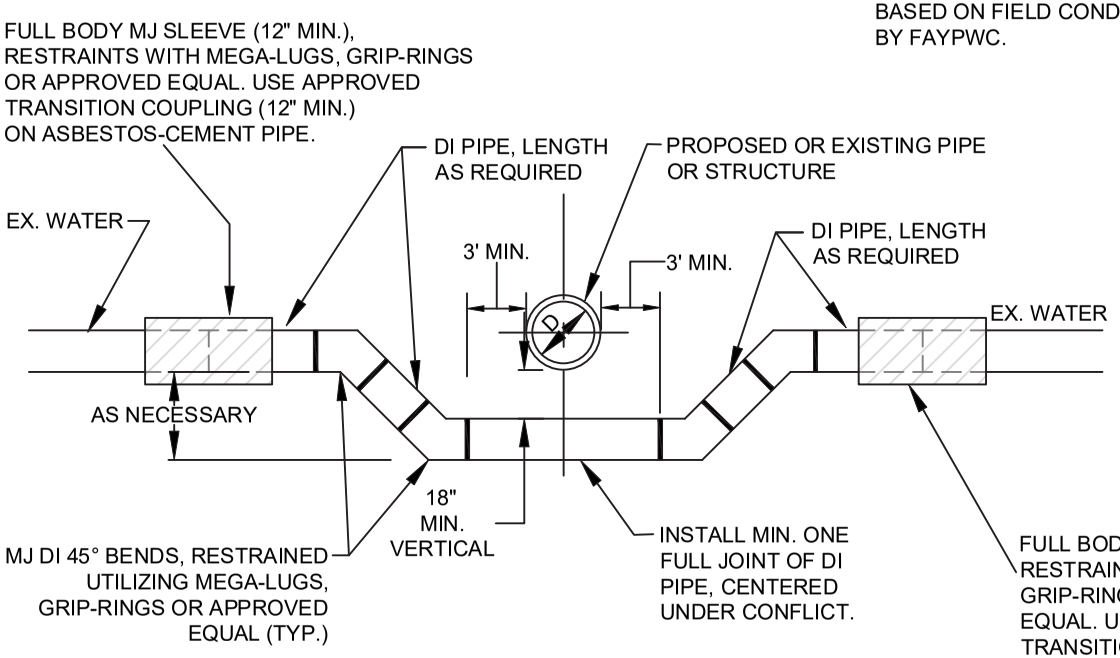

VERTICAL RELOCATION

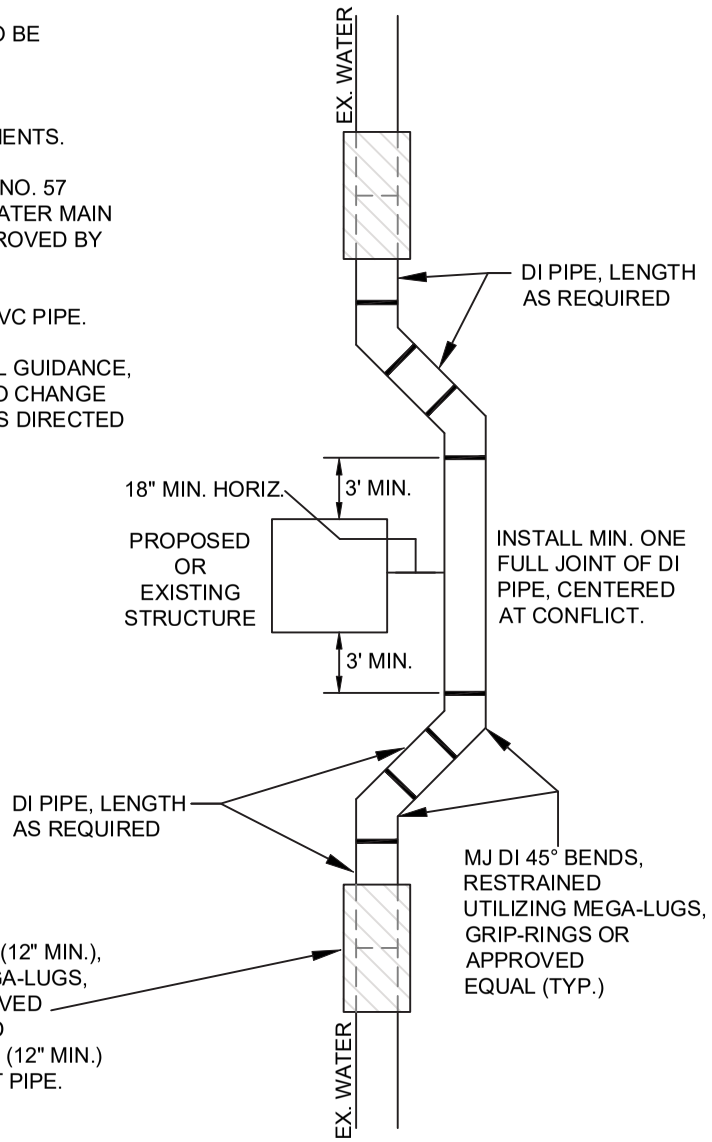

HORIZONTAL RELOCATION

PIPE RELOCATION DETAIL N.T.S.			FAYETTEVILLE PUBLIC WORKS COMMISSION FAYETTEVILLE, N.C.		NO.	DATE	REVISION
					1	01/12	REVISED NOTES, ADDED HORIZONTAL RELOCATION
SHEET NO. 1 OF 1	DWG. NO.: W.26	DWG. BY: FAYPWC	WATER RESOURCES ENGINEERING DEPARTMENT				
	DATE: JAN. 01, 2025	APPROVED BY: K.A.H.					

W26-PIPE-RELOCATION-DETAIL.dwg

APPENDICES

PROJECT TITLE_____**Pay App #**_____

SALES/USE TAX CERTIFICATE

(Use as many sheets as needed/sign affidavit of last sheet per pay estimate)

Analysis of consumed material **Manufactured or Purchased** by you. Sales and/or Use Tax Regulation Number 41 requires that the City of Fayetteville secure from each contractor certified statements setting forth the cost of the materials and supplies manufactured or purchased by you and consumed in construction. This form is provided for you to list the materials consumed in construction. Please complete this form by inserting the information required below.

Vendor Name	Date Purchased	Invoice Number	Amount Less Tax	Sales Tax % State/ % Local	Invoice Total	County Paid
_____	_____	_____	_____	_____/_____	_____	_____
_____	_____	_____	_____	_____/_____	_____	_____
_____	_____	_____	_____	_____/_____	_____	_____
_____	_____	_____	_____	_____/_____	_____	_____
_____	_____	_____	_____	_____/_____	_____	_____
_____	_____	_____	_____	_____/_____	_____	_____
			$_____	$_____	$_____	$_____

AFFIDAVIT

This is to certify that sales/use tax was or will be paid as stated above on materials and supplies purchased or manufactured by the **City of Fayetteville, North Carolina,** for the above mentioned project during the period and billed on this payment application #_____

_____
(Contractor)

_____
(Authorized Signature/Date)

_____
(Address)

_____
(Telephone Number)

_____
(City, State, Zip)

_____
(Fax Number)

Date:_____

Page _____ **of** _____

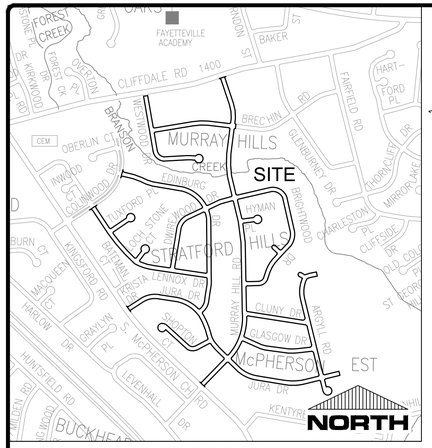

VICINITY MAP
(N.T.S.)

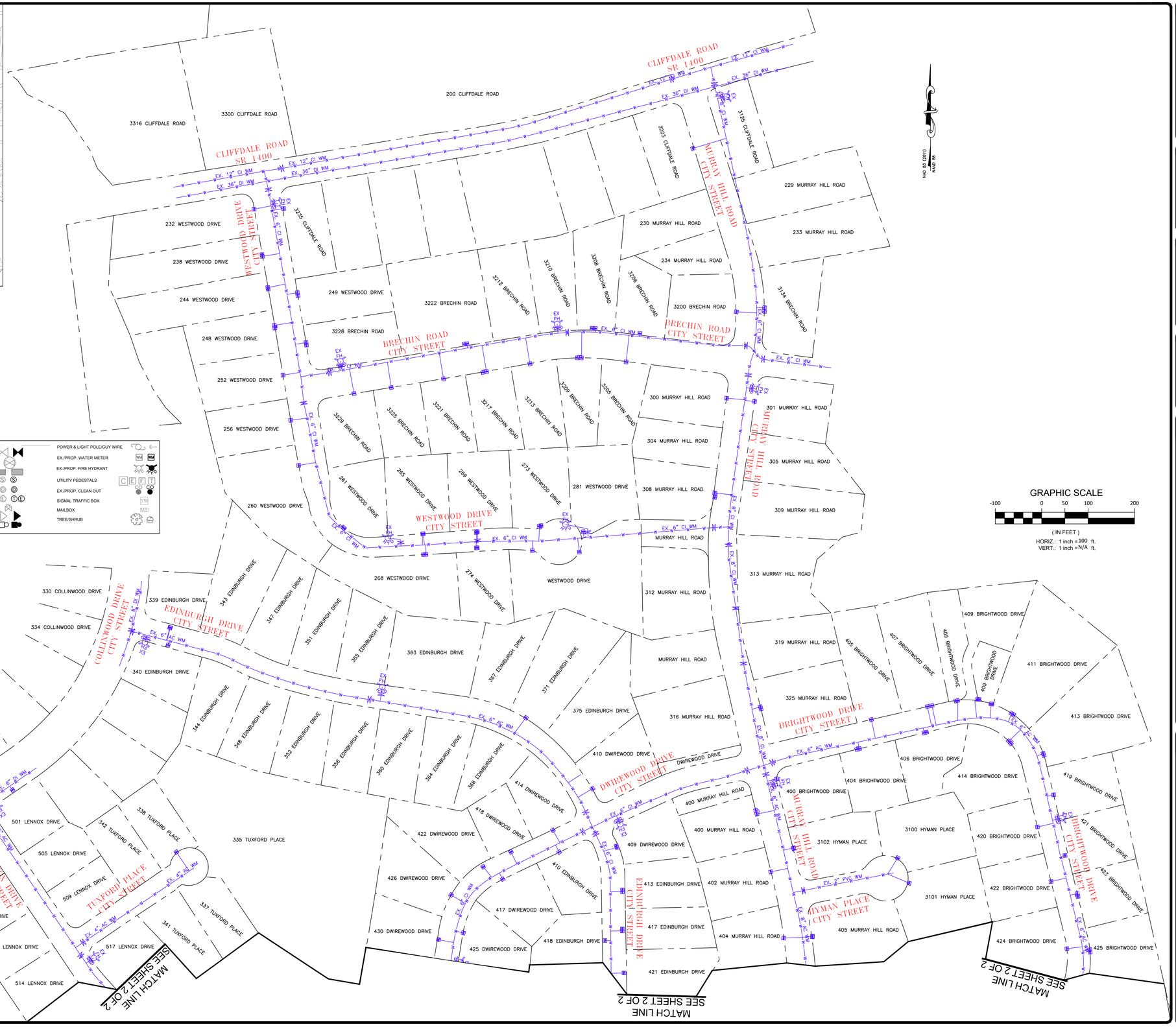

LEGEND

PROPERTY LINE	DITCH	POWER & LIGHT POLE/GUY WIRE
EDGE OF PAVEMENT	EX./PROP. GATE VALVE	EX./PROP. WATER METER
BACK OF CURB	AIR RELEASE VALVE	EX./PROP. FIRE HYDRANT
STORM PIPE	CATCH BASIN/DROP INLET	UTILITY PEDESTALS
EX. WATER MAIN	EX./PROP. SSMH	EX./PROP. CLEAN OUT
EX. SS MAIN	EX./PROP. STORM MH	SIGNAL TRAFFIC BOX
PROP. SS MAIN	EX./PROP. UTILITY MH	MAILBOX
PROP. WATER MAIN	GAS VALVE	TREE/SHRUB
EASEMENT	EX./PROP. PLUG	
FENCE	EX./PROP. BLOW-OFF	
WOOD FENCE		
EX. UTIL. LINES		
TREELINE		

Know what's **below.**
Call before you dig.

DATE	REVISIONS	BY

SHEET SERIES–

DATE: 2024/02/02
SURVEY/GPS BY: N/A
DRAWN BY: BGM
CHECKED BY:
SCALE: HOR: 1" = 100' VERT: 1" = N/A

FWR

1 OF 2

MURRAY HILL AREA 1
MURRAY HILL RD, EDINBURGH DR, BRECHIN RD, etc
FUTURE WATER REHABILITATION

FAYETTEVILLE PUBLIC WORKS COMMISSION
WATER RESOURCES ENGINEERING
P.O. Box 1089, Fayetteville, NC 28302
955 Old Wilmington Road, Fayetteville, NC 28301
Electric & Water Utilities

\\fs-wre\PROJECTS\ACTIVE PROJECTS\WATER REHAB PETE\FUTURE WATER REHABILITATION\2024 FUTURE MURRY HILL AREA 2 TALLYWOOD MURRY HILL POPLAR DR LAFETTE VILLAGE\2024-01-30 MURRY HILL AREA 1 FUTURE WATER REHABILITATION.dwg, FWR, 2/7/2024 9:42:57 AM, mullinsb

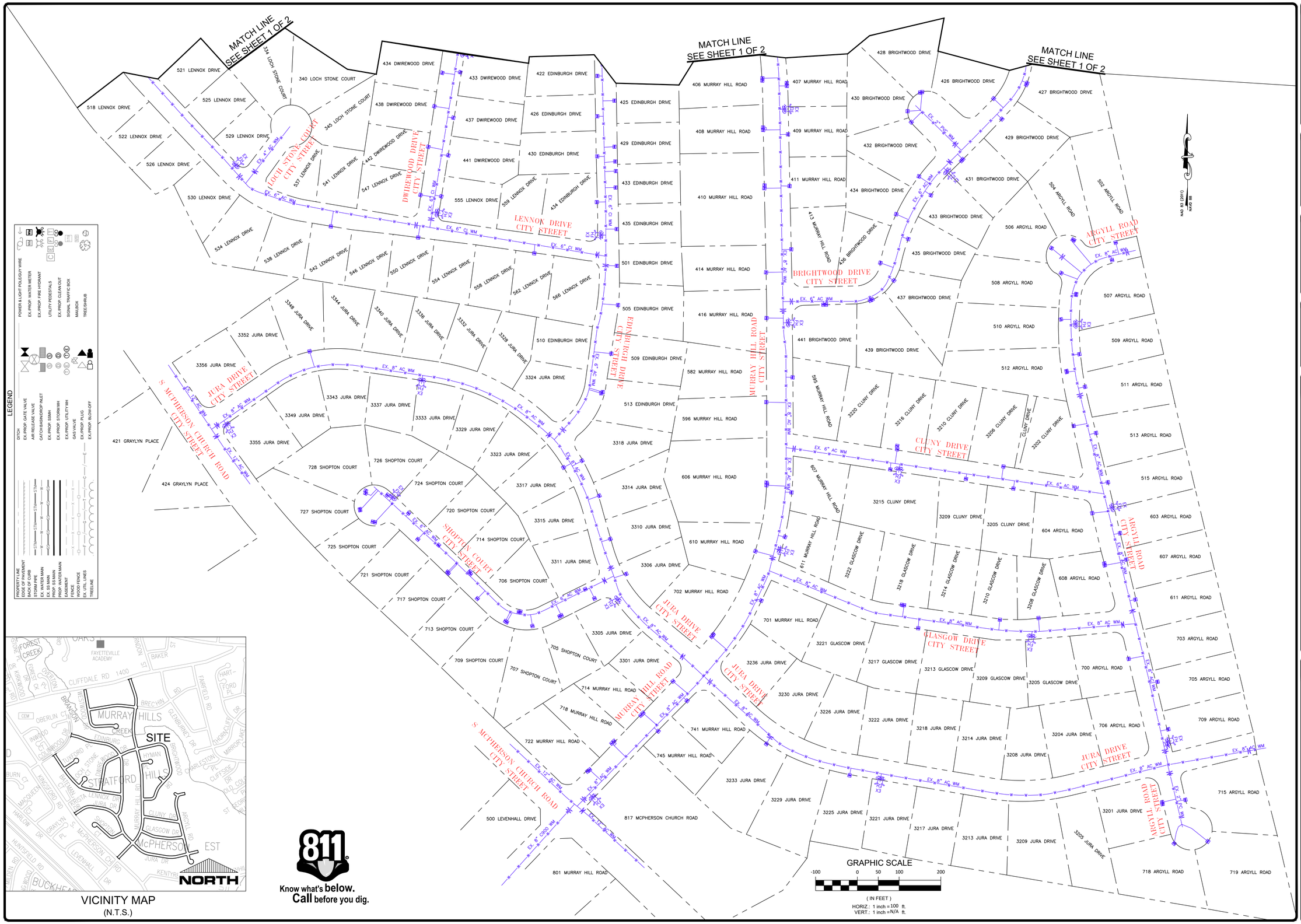

VICINITY MAP
(N.T.S.)

811
Know what's **below.**
Call before you dig.

DATE	REVISIONS	BY

SHEET SERIES–

DATE: 2024/02/02
SURVEY/GPS BY: N/A
DRAWN BY: BGM
CHECKED BY:
SCALE: HOR. 1" = 100' VERT. 1" = N/A

FWR

2 OF 2

MURRAY HILL AREA 1

MURRAY HILL RD, EDINBURGH DR, BRECHIN RD, etc

FUTURE WATER REHABILITATION

FAYETTEVILLE PUBLIC WORKS COMMISSION
WATER RESOURCES ENGINEERING
P.O. Box 1089, Fayetteville, NC 28302
955 Old Wilmington Road, Fayetteville, NC 28301
Engineering & Water Services

I:\fs-wet\PROJECTS\ACTIVE PROJECTS\WATER REHAB PETE\FUTURE WATER REHABILITATION\2024 FUTURE MURRY HILL AREA 2 TALLYWOOD MURRY HILL POPLAR DR LAFETTE VILLAGE\2024-01-30 MURRY HILL AREA 1 FUTURE WATER REHABILITATION.dwg, FWR 2, 2/7/2024 9:42:59 AM, mullinsb

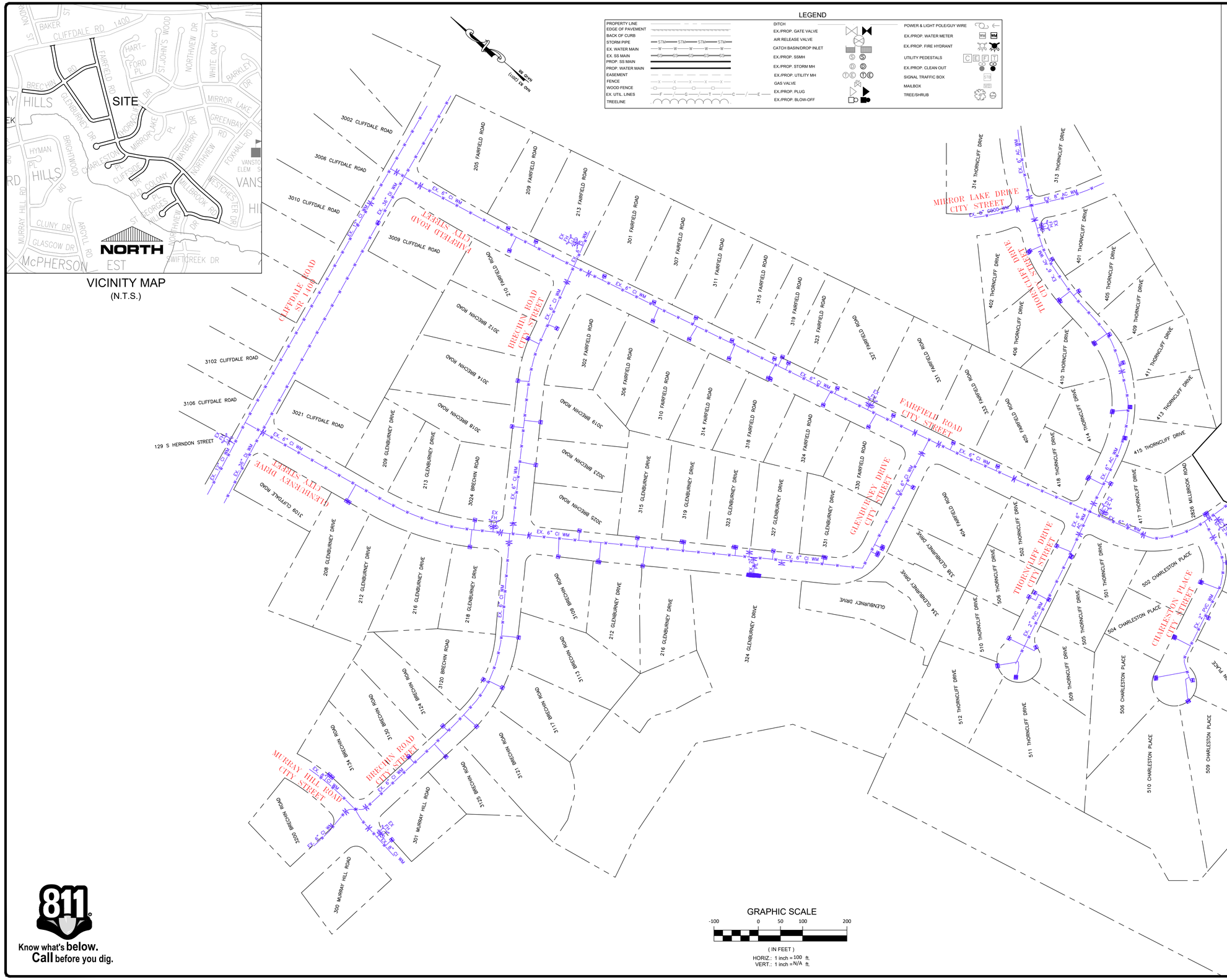

Know what's **below.**
Call before you dig.

DATE	REVISIONS	BY

SHEET SERIES–

DATE: 2024/02/06
SURVEY/GPS BY: N/A
DRAWN BY: BGM
CHECKED BY:
SCALE: HOR: 1" = 100' VERT: 1" = N/A

FWR

1 OF 2

MURRAY HILL AREA 2

FAIRFIELD RD, MILLBROOK RD, GLENBURNEY DR, etc

FUTURE WATER REHABILITATION

FAYETTEVILLE PUBLIC WORKS COMMISSION
WATER RESOURCES ENGINEERING
Electric & Water Utilities
P.O. Box 1089, Fayetteville, NC 28302
955 Old Wilmington Road, Fayetteville, NC 28301

\\fpwc-wrc\PROJECTS\ACTIVE PROJECTS\WATER REHAB PETER\FUTURE WATER REHABILITATION\2024 FUTURE MURRY HILL AREA 2 TALLYWOOD MURRY HILL POPLAR DR LAFETTE VILLAGE\2024-01-30 MURRAY HILL AREA 2 FUTURE WATER REHABILITATION.dwg, FWR 1, 2/7/2024 3:48:03 PM, mullinsb

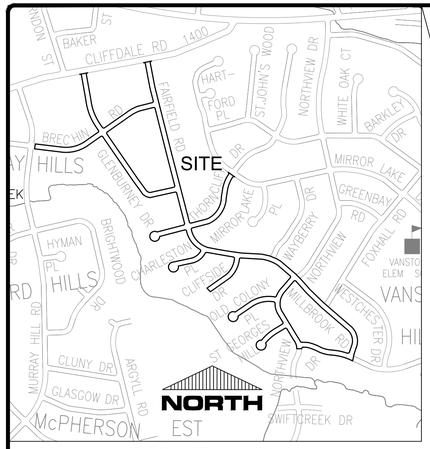

VICINITY MAP
(N.T.S.)

LEGEND

PROPERTY LINE	DITCH	POWER & LIGHT POLE/GUY WIRE	
EDGE OF PAVEMENT	EX./PROP. GATE VALVE	EX./PROP. WATER METER	WM
BACK OF CURB	AIR RELEASE VALVE	EX./PROP. FIRE HYDRANT	
STORM PIPE	CATCH BASIN/DROP INLET	UTILITY PEDESTALS	C E F T
EX. WATER MAIN	EX./PROP. SSMH	EX./PROP. CLEAN OUT	
EX. SS MAIN	EX./PROP. STORM MH	SIGNAL TRAFFIC BOX	STB
PROP. SS MAIN	EX./PROP. UTILITY MH	MAILBOX	MB
PROP. WATER MAIN	GAS VALVE	TREE/SHRUB	
EASEMENT	EX./PROP. PLUG		
FENCE	EX./PROP. BLOW-OFF		
WOOD FENCE			
EX. UTIL. LINES			
TREELINE			

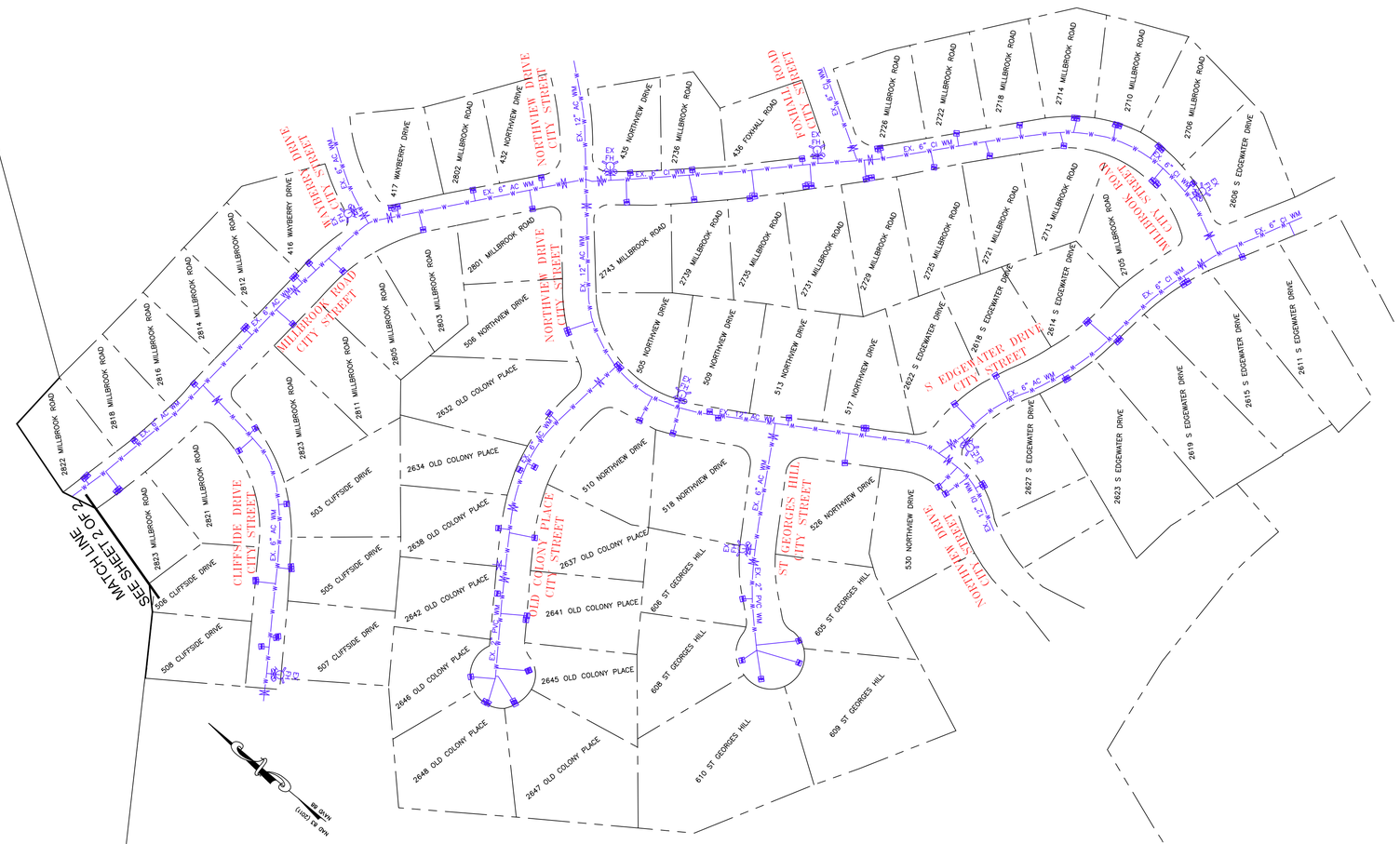

GRAPHIC SCALE

-100 0 50 100 200

(IN FEET)
HORIZ.: 1 inch = 100 ft.
VERT.: 1 inch = N/A ft.

Know what's **below.**
Call before you dig.

DATE	REVISIONS	BY

SHEET SERIES–

DATE: 2024/02/06
SURVEY/GPS BY: N/A
DRAWN BY: BGM
CHECKED BY:
SCALE: HOR: 1"= 100' VERT: 1"= N/A

FWR

2 OF 2

MURRAY HILL AREA 2

FAIRFIELD RD, MILLBROOK RD, GLENBURNEY DR, etc

FUTURE WATER REHABILITATION

FAYETTEVILLE PUBLIC WORKS COMMISSION
WATER RESOURCES ENGINEERING
Engineering & Water Quality
P.O. Box 1089, Fayetteville, NC 28302
955 Old Wilmington Road, Fayetteville, NC 28301

I:\fs-wre\PROJECTS\ACTIVE PROJECTS\WATER REHAB PETE\FUTURE WATER REHABILITATION\2024 FUTURE MURRY HILL AREA 2 TALLYWOOD MURRY HILL POPLAR DR LAFETTE VILLAGE\2024-01-30 MURRAY HILL AREA 2 FUTURE WATER REHABILITATION.dwg, FWR 2, 2/7/2024 3:48:05 PM, mullinsb

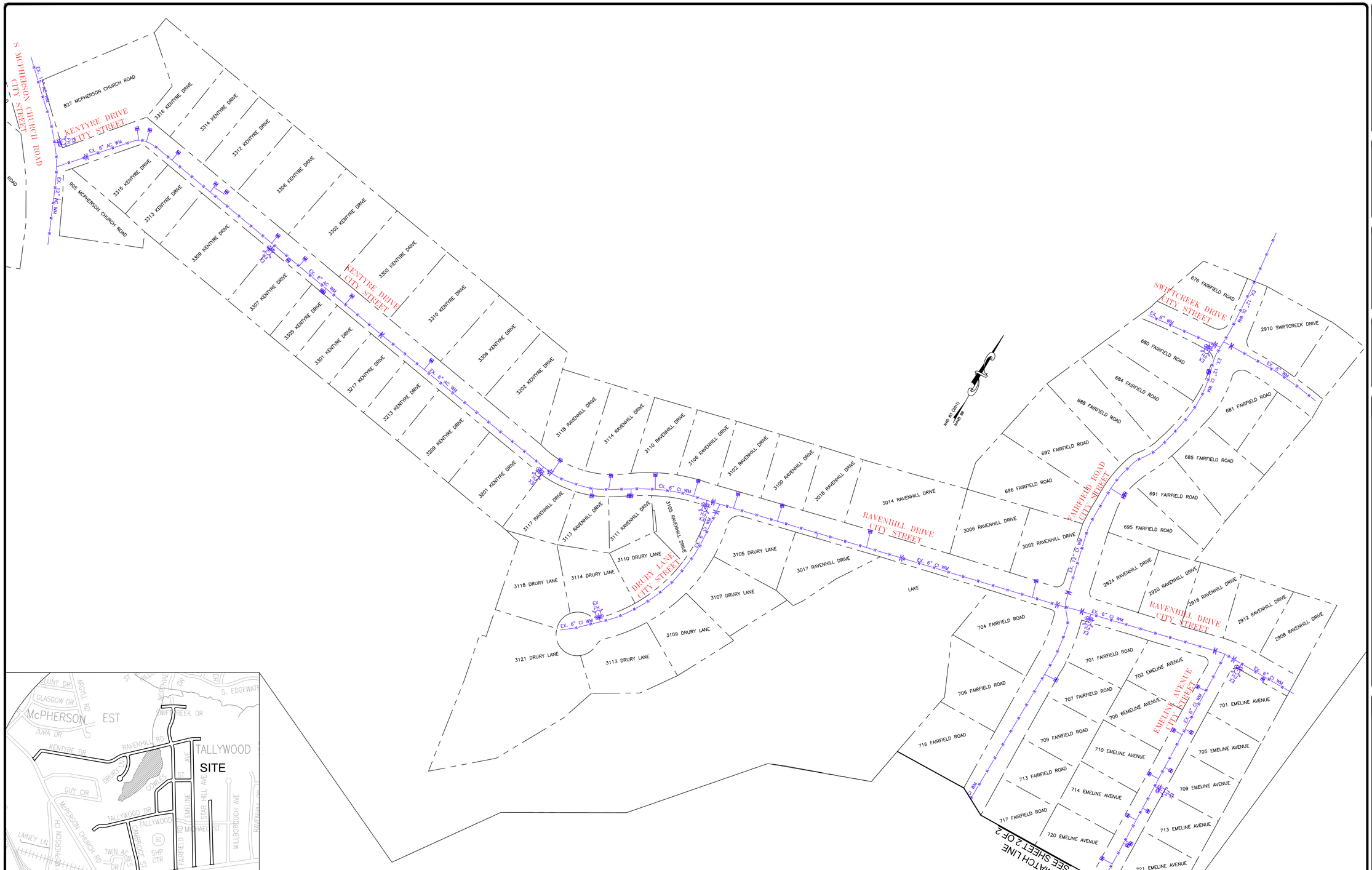
S MCPHERSON CHURCH ROAD
CITY STREET
KENTYRE DRIVE
CITY STREET
827 MCPHERSON CHURCH ROAD
905 MCPHERSON CHURCH ROAD
3316 KENTYRE DRIVE
3314 KENTYRE DRIVE
3312 KENTYRE DRIVE
3308 KENTYRE DRIVE
3302 KENTYRE DRIVE
3300 KENTYRE DRIVE
3310 KENTYRE DRIVE
3306 KENTYRE DRIVE
3202 KENTYRE DRIVE
3315 KENTYRE DRIVE
3313 KENTYRE DRIVE
3309 KENTYRE DRIVE
3307 KENTYRE DRIVE
3305 KENTYRE DRIVE
3301 KENTYRE DRIVE
3217 KENTYRE DRIVE
3213 KENTYRE DRIVE
3209 KENTYRE DRIVE
3201 KENTYRE DRIVE
3118 RAVENHILL DRIVE
3114 RAVENHILL DRIVE
3110 RAVENHILL DRIVE
3106 RAVENHILL DRIVE
3102 RAVENHILL DRIVE
3100 RAVENHILL DRIVE
3018 RAVENHILL DRIVE
3014 RAVENHILL DRIVE
3006 RAVENHILL DRIVE
3002 RAVENHILL DRIVE
2924 RAVENHILL DRIVE
2920 RAVENHILL DRIVE
2916 RAVENHILL DRIVE
2912 RAVENHILL DRIVE
2908 RAVENHILL DRIVE
RAVENHILL DRIVE
CITY STREET
3117 RAVENHILL DRIVE
3113 RAVENHILL DRIVE
3111 RAVENHILL DRIVE
3105 RAVENHILL DRIVE
3110 DRURY LANE
3114 DRURY LANE
3118 DRURY LANE
3121 DRURY LANE
3113 DRURY LANE
3109 DRURY LANE
3107 DRURY LANE
3105 DRURY LANE
3017 RAVENHILL DRIVE
DRURY LANE
CITY STREET
LAKE
FAIRFIELD ROAD
CITY STREET
676 FAIRFIELD ROAD
680 FAIRFIELD ROAD
684 FAIRFIELD ROAD
688 FAIRFIELD ROAD
692 FAIRFIELD ROAD
696 FAIRFIELD ROAD
704 FAIRFIELD ROAD
706 FAIRFIELD ROAD
716 FAIRFIELD ROAD
717 FAIRFIELD ROAD
713 FAIRFIELD ROAD
709 FAIRFIELD ROAD
707 FAIRFIELD ROAD
701 FAIRFIELD ROAD
695 FAIRFIELD ROAD
691 FAIRFIELD ROAD
685 FAIRFIELD ROAD
681 FAIRFIELD ROAD
SWIFTCREEK DRIVE
CITY STREET
2910 SWIFTCREEK DRIVE
EMELINE AVENUE
CITY STREET
702 EMELINE AVENUE
706 EMELINE AVENUE
710 EMELINE AVENUE
714 EMELINE AVENUE
720 EMELINE AVENUE
723 EMELINE AVENUE
721 EMELINE AVENUE
713 EMELINE AVENUE
709 EMELINE AVENUE
705 EMELINE AVENUE
701 EMELINE AVENUE
MATCH LINE
SEE SHEET 2 OF 2
Ex. 8" AC WM
Ex. 6" CI WM
Ex. 12" CI WM
Ex. 8" CI WM
Ex. 6" CI WM
Ex. 8" WM
Ex. 6" CI WM
Ex. 6" CI WM
Ex. 6" CI WM
Ex. 6" CI WM
Ex. 6" CI WM
Ex. 6" CI WM
Ex. 6" CI WM
Ex. 6" CI WM
Ex. 6" CI WM
Ex. 6" CI WM
Ex. 6" CI WM
Ex. 6" CI WM
Ex. 6" CI WM
Ex. 6" CI WM
Ex. 6" CI WM
Ex. 6" CI WM
Ex. 8" WM
Ex. 8" WM
Ex. 6" CI WM
Ex. 6" CI WM
Ex. 6" CI WM
Ex. 6" CI WM
Ex. 6" CI WM
Ex. 6" CI WM
Ex. 6" CI WM
Ex. 6" CI WM
Ex. 6" CI WM
Ex. 6" CI WM
Ex. 6" CI WM
Ex. 6" CI WM
Ex. 6" CI WM
Ex. 6" CI WM
Ex. 6" CI WM
Ex. 6" CI

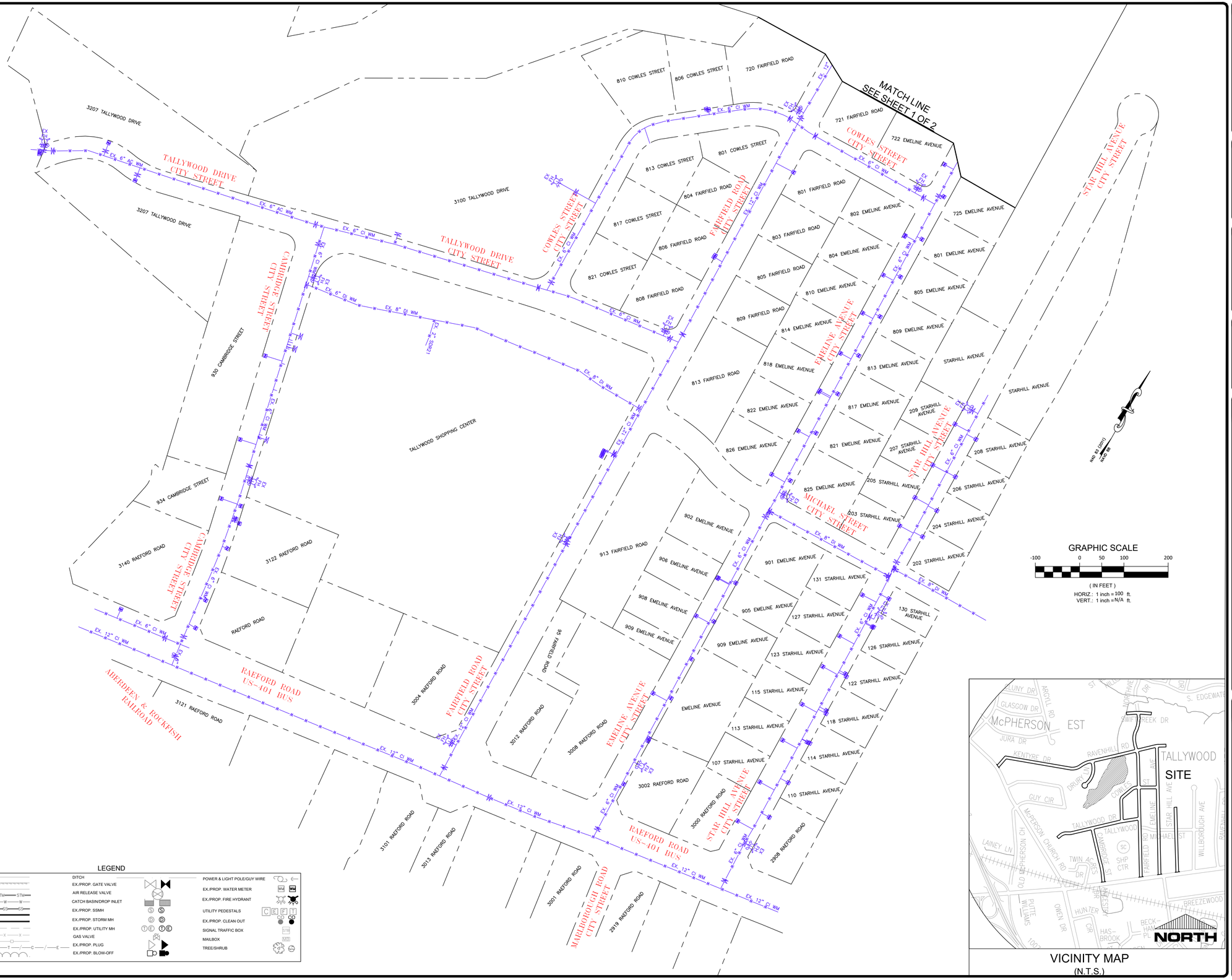

DATE	REVISIONS	BY

SHEET SERIES–

DATE: 2024/02/07
SURVEY/GPS BY: N/A
DRAWN BY: BGM
CHECKED BY:
SCALE: HOR. 1" = 100' VERT. 1" = N/A

FWR

2 OF 2

TALLYWOOD AREA

TALLYWOOD DR, CAMBRIDGE ST, FAIRFIELD RD, etc

FUTURE WATER REHABILITATION

FAYETTEVILLE PUBLIC WORKS COMMISSION
WATER RESOURCES ENGINEERING
P.O. Box 1089, Fayetteville, NC 28302
955 Old Wilmington Road, Fayetteville, NC 28301
Engineering & Water Services

\\fs-wr\PROJECTS\ACTIVE PROJECTS\WATER REHAB PETE\FUTURE WATER REHABILITATION\2024 FUTURE MURRAY HILL AREA 2 TALLYWOOD MURRAY HILL POPLAR DR LAFAYETTE VILLAGE\2024-02-07 TALLYWOOD AREA FUTURE WATER REHABILITATION.dwg, FWR 2, 2/8/2024 10:09:37 AM, mullinsb

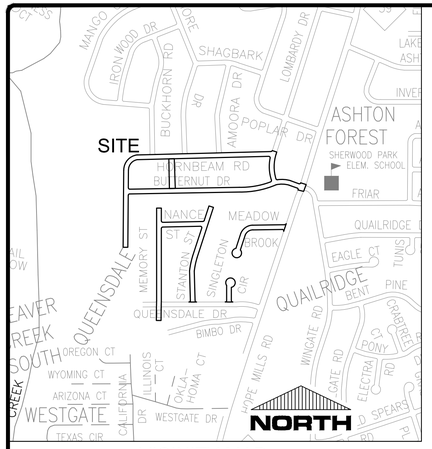

VICINITY MAP
(N.T.S.)

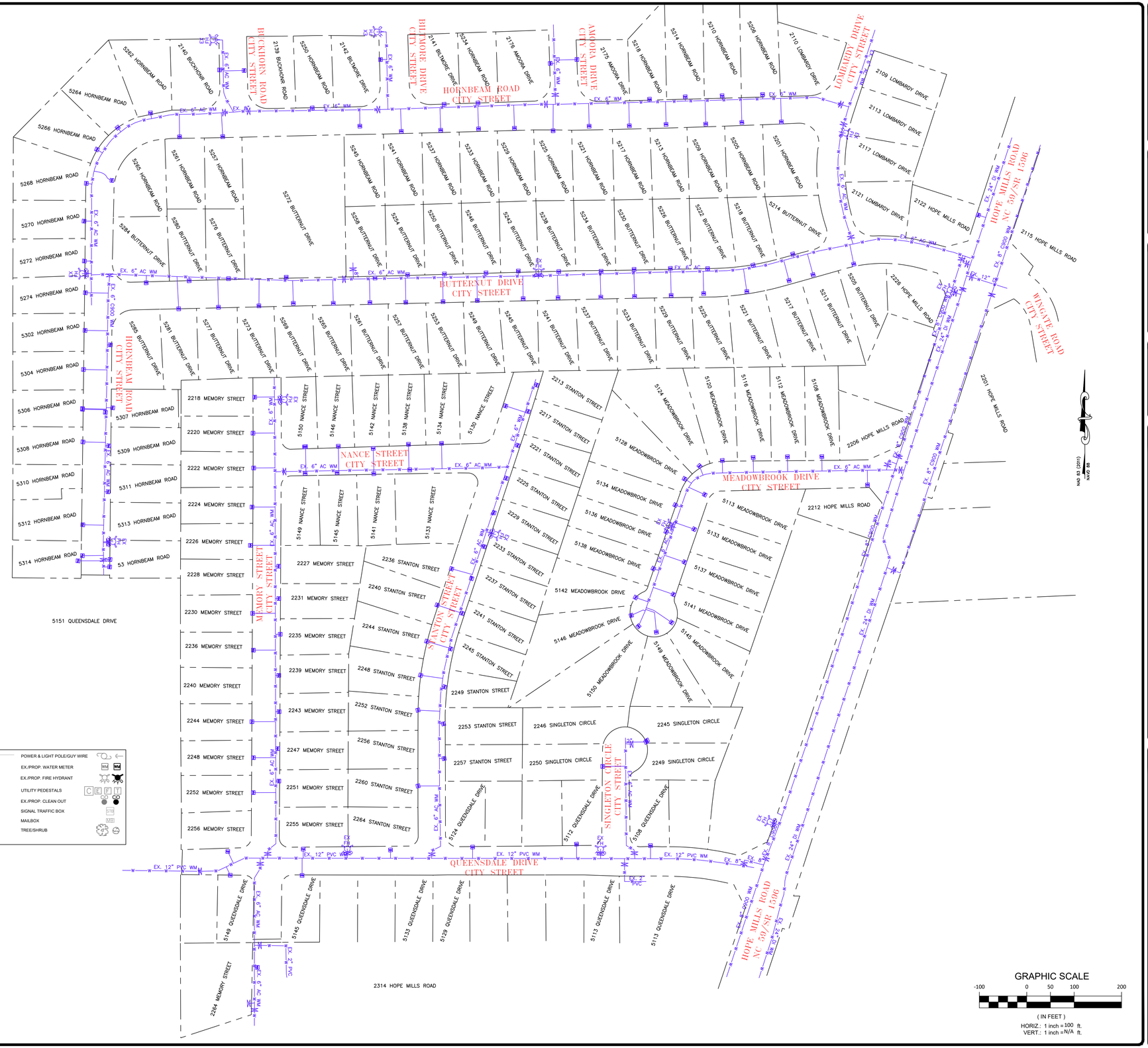

LEGEND

PROPERTY LINE	DITCH	POWER & LIGHT POLE/GUY WIRE
EDGE OF PAVEMENT	EX./PROP. GATE VALVE	EX./PROP. WATER METER
BACK OF CURB	AIR RELEASE VALVE	EX./PROP. FIRE HYDRANT
STORM PIPE	CATCH BASIN/DROP INLET	UTILITY PEDESTALS
EX. WATER MAIN	EX./PROP. SSMH	EX./PROP. CLEAN OUT
EX. SS MAIN	EX./PROP. STORM MH	SIGNAL TRAFFIC BOX
PROP. SS MAIN	EX./PROP. UTILITY MH	MAILBOX
PROP. WATER MAIN	GAS VALVE	TREE/SHRUB
EASEMENT	EX./PROP. PLUG	
FENCE	EX./PROP. BLOW-OFF	
WOOD FENCE		
EX. UTIL. LINES		
TREELINE		

GRAPHIC SCALE
-100 0 50 100 200
(IN FEET)
HORIZ.: 1 inch = 100 ft.
VERT.: 1 inch = N/A ft.

811
Know what's **below.**
Call before you dig.

DATE	REVISIONS	BY

SHEET SERIES–

DATE: 2024/02/08
SURVEY/GPS BY: N/A
DRAWN BY: BGM
CHECKED BY:
SCALE: HOR. 1" = 100' VERT. 1" = N/A

FWR

1 OF 1

LAFAYETTE VILLAGE AREA 1
STANTON ST, NANCE ST, MEMORY ST, etc
FUTURE WATER REHABILITATION

FAYETTEVILLE PUBLIC WORKS COMMISSION
WATER RESOURCES ENGINEERING
P.O. Box 1089, Fayetteville, NC 28302
955 Old Wilmington Road, Fayetteville, NC 28301
Excellence in Water Services

I:\fs-wr\PROJECTS\ACTIVE PROJECTS\WATER REHAB PETE\FUTURE WATER REHABILITATION\2024 FUTURE MURRAY HILL AREA 2 TALLYWOOD MURRAY HILL POPLAR DR LAFAYETTE VILLAGE\2024-02-08 LAFAYETTE VILLAGE AREA 1 HOPE MILLS FUTURE WATER REHABILITATION.dwg, FWR 1, 2/13/2024 11:55:49 AM, mullinsb

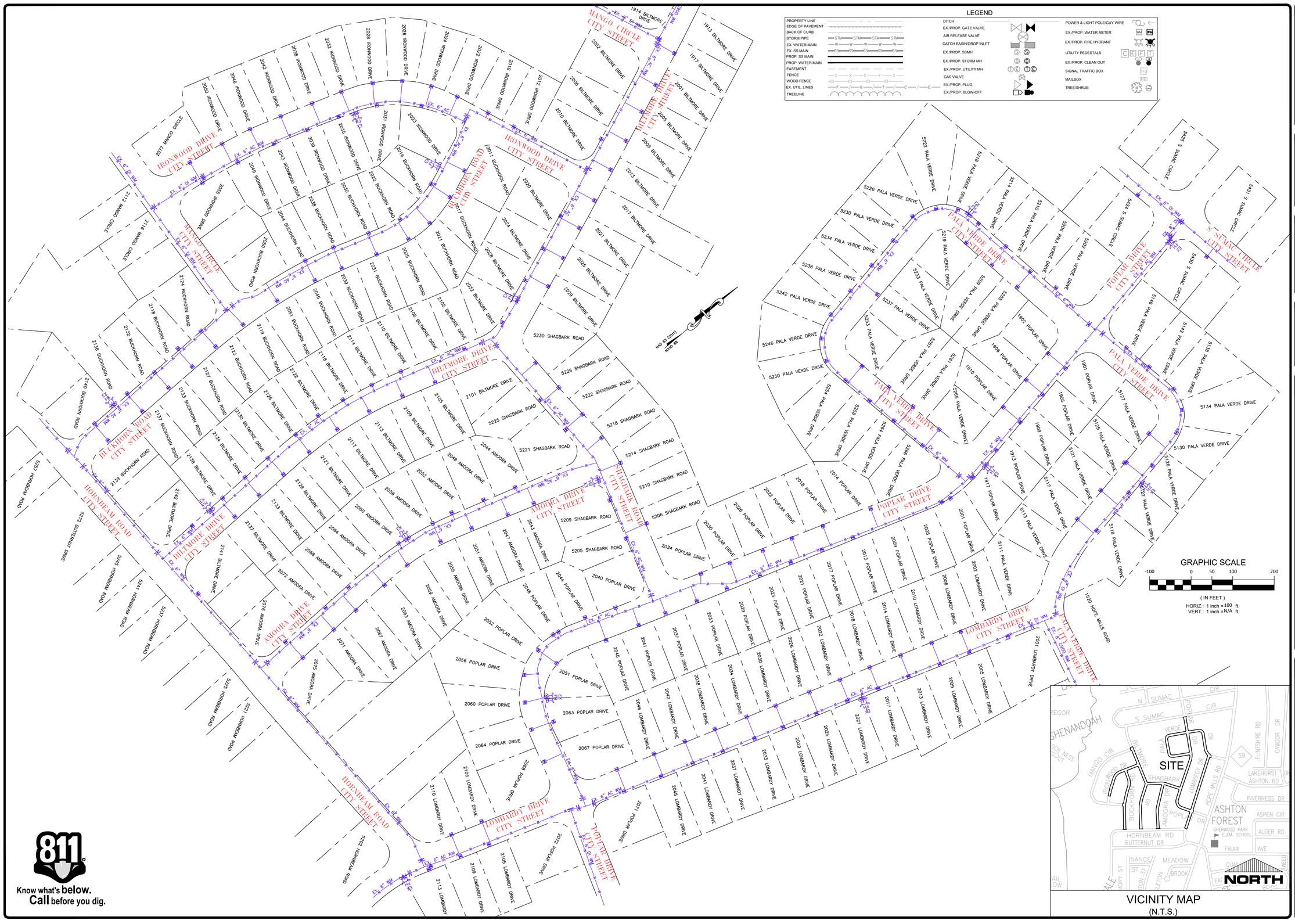

DATE	REVISIONS	BY

SHEET SERIES–

DATE: 2024/02/13
SURVEY/GPS BY: N/A
DRAWN BY: BGM
CHECKED BY:
SCALE: HOR: 1"= 100' VERT: 1"= N/A

FWR

1 OF 1

LAFAYETTE VILLAGE AREA 2
LOMBARDY DR, POPLAR DR, BILTMORE CIR, etc.
FUTURE WATER REHABILITATION

FAYETTEVILLE PUBLIC WORKS COMMISSION
WATER RESOURCES ENGINEERING
Electric & Water Utilities
P.O. Box 1089 Fayetteville, NC 28302
955 Old Wilmington Road, Fayetteville, NC 28301

\\fs-wer\PROJECTS\ACTIVE PROJECTS\WATER REHAB PETE\FUTURE WATER REHABILITATION\2024 FUTURE MURRAY HILL AREA 2 TALLYWOOD MURRAY HILL POPLAR DR LAFAYETTE VILLAGE\2024-02-12 LAFAYETTE VILLAGE AREA 2.dwg, FWR 1, 2/13/2024 11:22:09 AM, mullinsb

Insert your company logo here

Serial Number:

EPOXY RESIN LINING RECORD

(All items to be completed)

Location	

Contract		Hole Numbers	
Supervisor		Pipe Diameter	
Gang Number		Length Lined	
Date		Epoxy Material	

Lining Rig Number			
Application Head Number			
Resin Batch Numbers		Quantity	
Hardener Batch Numbers		Quantity	

Cleaned: Visual Checks OK?	YES	NO	Method Used	Rackbore	Drag Scrape
Cleaned: CCTV Survey OK?	YES	NO		Number of Swabs	

Resin Temperature	°C	Hardener Temperature	°C
Lining: Time Start		Spin-up Time	(Mins)
Lining: Time Complete			

Weight Check 1 OK?	YES	NO	Weight Check 2 OK?	YES	NO
Mix-Ratio Print out OK?	YES	NO	Tab Test OK?	YES	NO

INSPECTION	PRE-CURE		POST-CURE	
Uniformity OK?				
Quality OK?				
Thickness OK?				

Position	3 o'clock		6 o'clock		9 o'clock		12 o'clock	
Pre-Cure Start/Finish Thickness								

Curing Time: Start			Curing Time: Finish		
Hours Cured			Tack Free	YES	NO
CCTV Survey OK?	YES	NO	CCTV Record Number		

Free Chlorine	mg/l		Chlorine Residual	mg/l	
Contract Time	hrs		Flushing Time		
Dechlorinated?	YES	NO	Where Discharged		
Reconnection Date			Reconnection Time		
Pipe Sample Record Number			Sample Quality OK?	YES	NO
Non-Conformance Record No.					

Comments:

Signed for Contractor _____ Signed for Client_____

Insert your company logo here

Serial Number:

EPOXY RESIN LINING NON CONFORMANCE RECORD

Location	

Contract		Hole Numbers	
Scheme		Pipe Diameter	
Supervisor		Epoxy Material	
Date		ERLR Number	

Nature of Defect	
Reason for Defect	
Action Taken	

Date of Action		ERLR Number (If Relined)	

Action Taken to Prevent Recurrence	
Comments	

For Client		For Contractor	
Signature		Signature	
Print Name		Print Name	
Position		Position	
Date		Date	

Insert your company logo here

Serial Number:

EPOXY RESIN LINING PIPE SAMPLE QUALITY RECORD

Location	

Contract		Hole Numbers	
Scheme		Pipe Diameter	
Supervisor		Epoxy Material	
Date		ERLR Number	

END 1

Position	3 o'clock	6 o'clock	9 o'clock	12 o'clock
Thickness (mm)				

Mean [ ] Max [ ] Min [ ]

END 2

Position	3 o'clock	6 o'clock	9 o'clock	12 o'clock
Thickness (mm)				

Mean [ ] Max [ ] Min [ ] Lining Accepted? YES NO

Pipe Suitable for Relining? YES NO

Pipe Requires Renewing? YES NO

LINING FAULTS

Faults Observed	Tick	Comments
Incomplete Lining		
Water Damage		
Slump		
Ridging/Ringing		
Mix-Ratio Error		
Single Component		
Blisters		
Projecting Ferrules		
Poor Cleaning		
Other		

PIPE CONDITION

	Tick	Comments
Oval		
Undersized		
External Light Corrosion		
External Medium Corrosion		
External Heavy Corrosion		

Comments:

Photographs Taken YES NO

NCR Number Issued (If any)

Attach any photographs or negatives to record

Sample Passed to Client: Inspection Office

Date

Note: All pipes must be cut with pipe crackers. All samples to be clean and indelibly marked with PWQR Number

For Client		For Contractor	
Signature		Signature	
Print Name		Print Name	
Position		Position	
Date		Date	

Insert your company logo here

Serial Number:

EPOXY RESIN LINING SPIN-UP DETERMINATION RECORD

Location	

Contract		Epoxy Material	
Supervisor		Rig Type	
Date		Rig Number	

Total Flow Rate	(1/min)	Ambient Temp	°C	
		Umbilical?	YES	NO

TEST RESULTS

Tab Number	Elapsed Time (min)	Colour Correct		Snap Test Results
1.		YES	NO	
2.		YES	NO	
3.		YES	NO	
4.		YES	NO	
5.		YES	NO	
6.		YES	NO	
7.		YES	NO	
8.		YES	NO	
9.		YES	NO	
10.		YES	NO	
11.		YES	NO	
12.		YES	NO	

Tab Cure Time		Date Tested	

Min. Acceptable Spin Up Time	(mins)

Note: This is the time of the first satisfactory snap test plus 30 seconds. Minimum allowable time: 1.5 min.

Test Carried Out By		Witness By Client	
Signature		Signature	
Print Name		Print Name	
Position		Position	
Date		Date	

Insert your company logo here

Serial Number:

EPOXY RESIN LINING PIPE SAMPLE QUALITY RECORD

Location	

Contract		Hole Numbers	
Supervisor		Pipe Diameter	
Gang Number		Length Surveyed	
Date/Time		ERLR Number	

Copy of Recording Retained?	YES	NO	CCTV Reference	

Faults Observed	Position	Comment 1	Comment 2

CCTV TO BE WITNESSED BY CLIENT

For Client		For Contractor	
Signature		Signature	
Print Name		Print Name	
Position		Position	
Date		Date	

Remedial Action Taken?	YES	NO		
NCR Number				
Pipe Sample Taken?	YES	NO	PSQR Number	

Contractor's Representative			
Signature		Signature	
Print Name		Print Name	
Position		Position	
Date		Date	